7AKP19 AND 7AKP25
CATHODE RAY TUBE

7-INCH RECTANGULAR, GLASS	FACE PLATE - SPHERICAL, CLEAR
FOCUS - ELECTROSTATIC	PERSISTENCE - LONG
DEFLECTION - ELECTROSTATIC	POST ACCELERATION
TWO GUNS	ALUMINIZED

DESCRIPTION AND RATING

The 7AKP19 and 7AKP25 are 4 by 6-inch rectangular faced cathode ray tubes with electrostatic-focus and deflection for radar and oscillographic applications that require a long persistence. They have two electron guns and use post-acceleration. A particular feature of the 7AKP25 is the phosphor which is more burn-resistant than that in the 7AKP19, and which eliminates the initial blue flash characteristic of the P7 phosphor.

GENERAL
Data and Ratings Are Per Gun Unless Otherwise Specified

ELECTRICAL

Heater Voltage	6.3 Volts
Heater Current	0.6 ± 10% Amperes

Focusing Method - Electrostatic
Deflecting Method - Electrostatic

Direct Interelectrode Capacitances, maximum

Cathode to All Other Electrodes	7 uuf
Grid No. 1 to All Other Electrodes	8 uuf
D1 to D2	6 uuf
D3 to D4	6 uuf
D1 to All Other Electrodes	11.5 uuf
D2 to All Other Electrodes	11.5 uuf
D3 to All Other Electrodes	11.5 uuf
D4 to All Other Electrodes	11.5 uuf

OPTICAL

	7AKP19	7AKP25
Phosphor Number	P19	P25
Fluorescent Color	Orange	Orange
Phosphorescent Color	Orange	Orange
Persistencd	Long	Long

Faceplate - Clear

MECHANICAL

Over-all Length . . . . . 17-7/8 ± 3/8 Inches
Greatest Bulb Dimensions
Diagonal . . . . . 6-5/8 ± 1/16 Inches
Width . . . . . .6-1/32 ± 1/16 Inches
Height . . . . . .4-1/32 ± 1/16 Inches
Minimum Useful Screen Dimensions, along tube axis . . 3-1/4 by 5-1/4 Inches

Post-Accelerator Bulb Contact - Special Molded Cap
Base - 25 Pin, JETEC No. B25-139
Basing - Special
Bulb Contact Alignment
Post-Accelerator Contact Aligns with Trace of D1-D2 ± 10 Degrees
Post-Accelerator Contact on Same Side as Pin No. 1

Base Alignment
D1-D2 Trace Aligns with Pin No. 1 and Tube Axis ± 10 Degrees
Positive Voltage on D1 Deflects Beam Approximately Toward Pin No. 1
Positive Voltage on D3 Deflects Beam Approximately Toward Pin No. 12

Angle between D3-D4 and D1-D2 Traces. . . . . 90 ± 1 Degrees
Angle between Corresponding Traces . . . . . 1 Max. Degrees
D1-D2 Trace Aligns with Bulb Wall . . . . . Within ± 3 Degrees

Mounting Position - Any

MAXIMUM RATINGS

DESIGN-CENTER VALUES*
Per Gun Unless Otherwise Specified
Post-Accelerator Voltage . . . . . 10,000 Max. Volts DC
Anode Voltage#. . . . . 4,950 Max. Volts DC
Ratio Post-Accelerator Voltage to Anode Voltage . . . . . 2.0 Max.
Anode Current . . . . . ##

Focusing-Electrode Voltage. . . . . 2500 Max. Volts DC
Grid No. 1 Voltage
Negative-Bias Value . . . . . 200 Max. Volts DC
Positive-Bias Value . . . . . 0 Max. Volts DC
Positive-Peak Value . . . . . 2 Max. Volts

Peak Heater-Cathode Voltage
Heater Negative with Respect to Cathode . . . . . .180 Max. Volts
Heater Positive with Respect to Cathode . . . . . .180 Max. Volts
Peak Voltage between Anode and Any Deflecting Electrode . . . . 1000 Max. Volts

TYPICAL OPERATING CONDITIONS
Per Gun Unless Otherwise Specified

Post-Accelerator Voltage	7300 Volts DC
Anode Voltage	4000 Volts DC
Focusing-Electrode Voltage	1150 to 1500 Volts DC
Grid No. 1 Voltage**	-50 to -120 Volts DC
Deflection Factors	
D1 and D2	180 to 225 Volts DC per Inch
D3 and D4	140 to 170 Volts DC per Inch
Focusing-Electrode Current	-15 to +10 Microamperes
Spot Position, undeflected+	Within 15 mm Square
Line Width A++	0.30 Max. Millimeters
Line Width B++	0.50 Max. Millimeters

MAXIMUM CIRCUIT VALUES

Grid No. 1 Circuit Resistance	1.5 Max. Megohms

*The maximum ratings provide a ten-percent safety factor in accordance with the standard design-center system of rating cathode ray tubes. The tube will withstand the combined effects of variations in line voltage and components provided the maximum design-center values are not exceeded by more than ten percent.

#Anode, grid No. 2, and grid No. 4 which are connected together within the tube are referred to herein as anode.

##The phosphor screen may be damaged if the exciting current density is greater than 1.4 microamperes per square centimeter for the P25, and 0.06 microamperes per square centimeter for the P19.

**For visual extinction of focused undeflected spot.

+The design-center positions of the undeflected spots are located ± 1/2 inch from the center of the tube face on a vertical line through the center of the face.

++ Measured in accordance with specification MIL-E-1C paragraph 4.12.6.1 at an anode No. 3 (post-accelerator anode) current of 2.0 microamperes d-c.

Electronic Components Division
Cathode Ray Tube Department
Electronics Park - Syracuse, New York

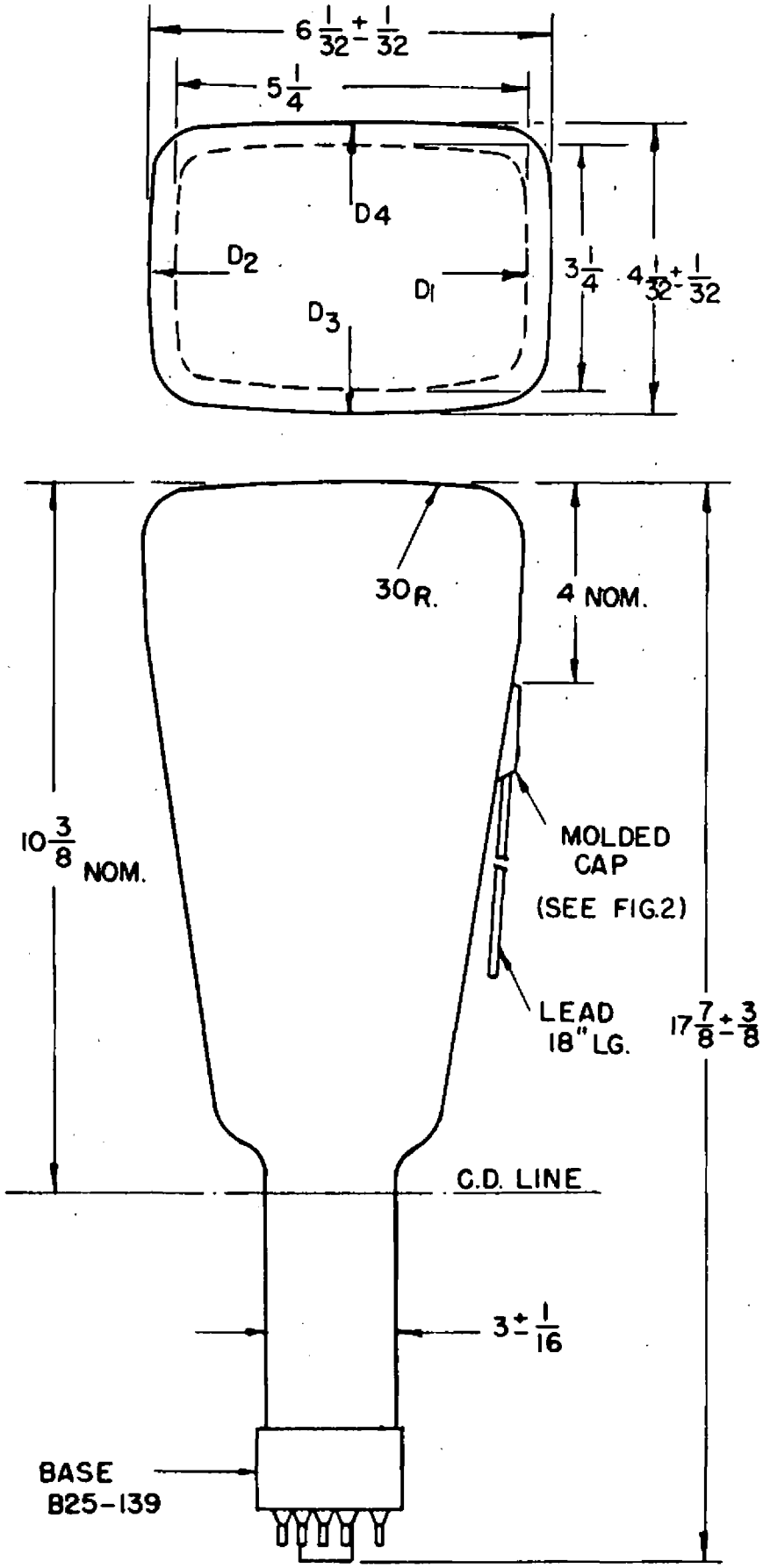
6 1/32 + 1/32
5 1/4
D4
D2
D1
D3
3 1/4
4 1/32 + 1/32
30 R.
4 NOM.
10 3/8 NOM.
MOLDED CAP
(SEE FIG.2)
LEAD 18" LG.
17 7/8 + 3/8
C.D. LINE
3 + 1/16
BASE B25-139

FIG. 1

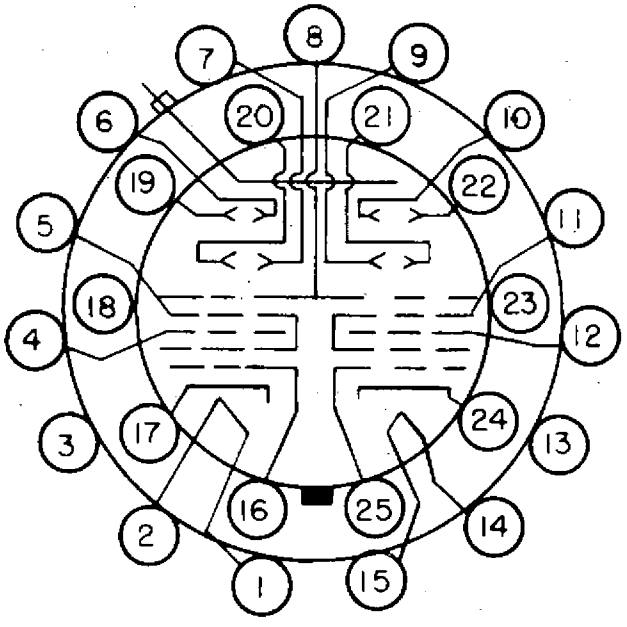

BOTTOM VIEW

UNIT A		UNIT B	
PIN NO.	ELEMENT	PIN NO.	ELEMENT
14	HEATER	1	HEATER
15	HEATER	2	HEATER
24	CATHODE	17	CATHODE
25	GRID NO. 1	16	GRID NO. 1
12	FOCUSING ELECTRODE	4	FOCUSING ELECTRODE
22	DEFLECTOR D1	6	DEFLECTOR D1
10	DEFLECTOR D2	19	DEFLECTOR D2
9	DEFLECTOR D3	20	DEFLECTOR D3
21	DEFLECTOR D4	7	DEFLECTOR D4
11	ANODE	5	ANODE
13	NO CONNECTION	3	NO CONNECTION
23	NO CONNECTION	18	NO CONNECTION
		8	SHIELD

CAP-POST ACCELERATOR

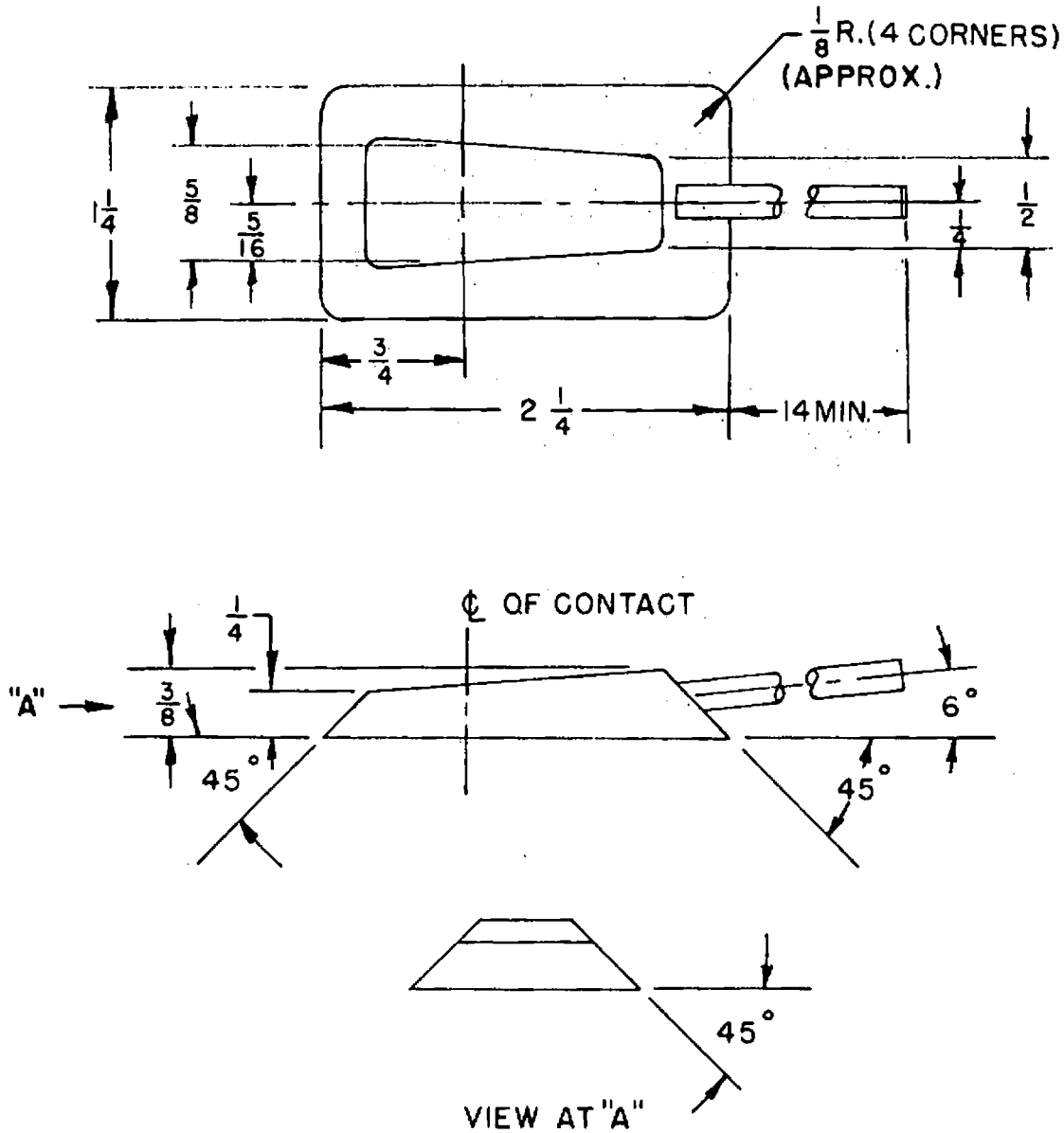

FIG. 2

DIMENSIONS ARE MAXIMUM UNLESS OTHERWISE SPECIFIED.