from JEDEC release #3613, Feb. 26, 1962

engineering TUBE DATA

ITT Components Division

**

F-7906 AND
F-7907
POWER DIODES

DESCRIPTION:

THE F-7906 AND F-7907 ARE DIODES THAT MAY BE USED IN RECTIFIER SERVICE OR IN SPECIAL APPLICATIONS IN SHUNTING OR CHARGING CIRCUITS WHEREVER HIGH PEAK INVERSE VOLTAGES, EXTREME ENVIRONMENTAL CONDITIONS, OR HIGH OPERATING FREQUENCIES AND TRANSIENTS ARE PRESENT. THE EXCEPTIONALLY RUGGED CONSTRUCTION MAKES THESE TYPES ADAPTABLE TO A WIDE RANGE OF USES. THE HIGH THERMAL INERTIA OF THE HEAVY WALL EXTERNAL ANODE PROTECTS AGAINST TUBE DAMAGE DURING MOMENTARY OVERLOAD CONDITIONS. THE CATHODE IS A THORIATED TUNGSTEN FILAMENT OF MESH CONSTRUCTION.

ELECTRICAL:

FILAMENT VOLTAGE	7.0	VOLTS
FILAMENT CURRENT	265	AMPERES
FILAMENT STARTING CURRENT	1,000	AMPERES
CAPACITANCE INTER-ELECTRODE	45	UUF

MAXIMUM RATINGS	SHUNT	CHARGING	RECTIFIER	
MAXIMUM PEAK INVERSE VOLTAGE	55	55	50	KILOVOLTS
MAXIMUM PEAK PLATE CURRENT	130*	20 RMS	45	AMPERES
MAXIMUM AVERAGE PLATE CURRENT	-	-	15	AMPERES

MECHANICAL:

MOUNTING POSITION	VERTICAL, ANODE UP OR DOWN
TYPE OF COOLING	SEE BELOW

	F-7906			F-7907			
PLATE DISSIPATION	50	40	30	20	15	10	KILOWATTS
WATER FLOW	30	22	15	-	-	-	GPM
WATER JACKET PRESSURE DROP	11	6.5	3	-	-	-	PSI
AIR FLOW (NOTE 1)	-	-	-	1250	800	600	MIN. CFM
STATIC AIR PRESSURE	-	-	-	3.5	2.0	1.0	INCHES OF WATER
MAX. INCOMING AIR TEMPERATURE			45°C				
MAX. RADIATOR CORE TEMPERATURE			180°C	(NOTES 2 & 3)			
MAX. GLASS AND SEAL TEMPERATURE			180°C			180°C	(NOTE 3)
NET WEIGHT						72	LBS.

* MAXIMUM PEAK PLATE CURRENT OF UP TO 180 AMPERES IS RATED UNDER FILAMENT EXCITATION VOLTAGE OF 7.6 VOLTS.

** FORMERLY D-1034-A AND B

ITT ELECTRON TUBE DEPARTMENT
COMPONENTS DIVISION
INTERNATIONAL TELEPHONE AND TELEGRAPH CORPORATION
P.O. BOX 412 CLIFTON, NEW JERSEY

NOTE 1: COOLING AIR SHOULD BE APPLIED BEFORE OR SIMULTANEOUSLY WITH THE APPLICATION OF ANY VOLTAGES. AIR FLOW SHOULD CONTINUE APPROXIMATELY TWO MINUTES AFTER THE REMOVAL OF ALL VOLTAGES.

NOTE 2: MEASURED ON THE CORE AT END AWAY FROM INCOMING AIR.

NOTE 3: A TEMPERATURE SENSITIVE LACQUER MANUFACTURED BY THE TEMPIL CORPORATION, 132 W. 22ND STREET, NEW YORK 11, N.Y., IS CONVENIENT FOR THIS MEASUREMENT.

ADDITIONAL INFORMATION FOR SPECIFIC APPLICATIONS CAN BE OBTAINED FROM THE:

ELECTRON TUBE APPLICATIONS SECTION
ITT COMPONENTS DIVISION
POST OFFICE BOX 412
CLIFTON, NEW JERSEY

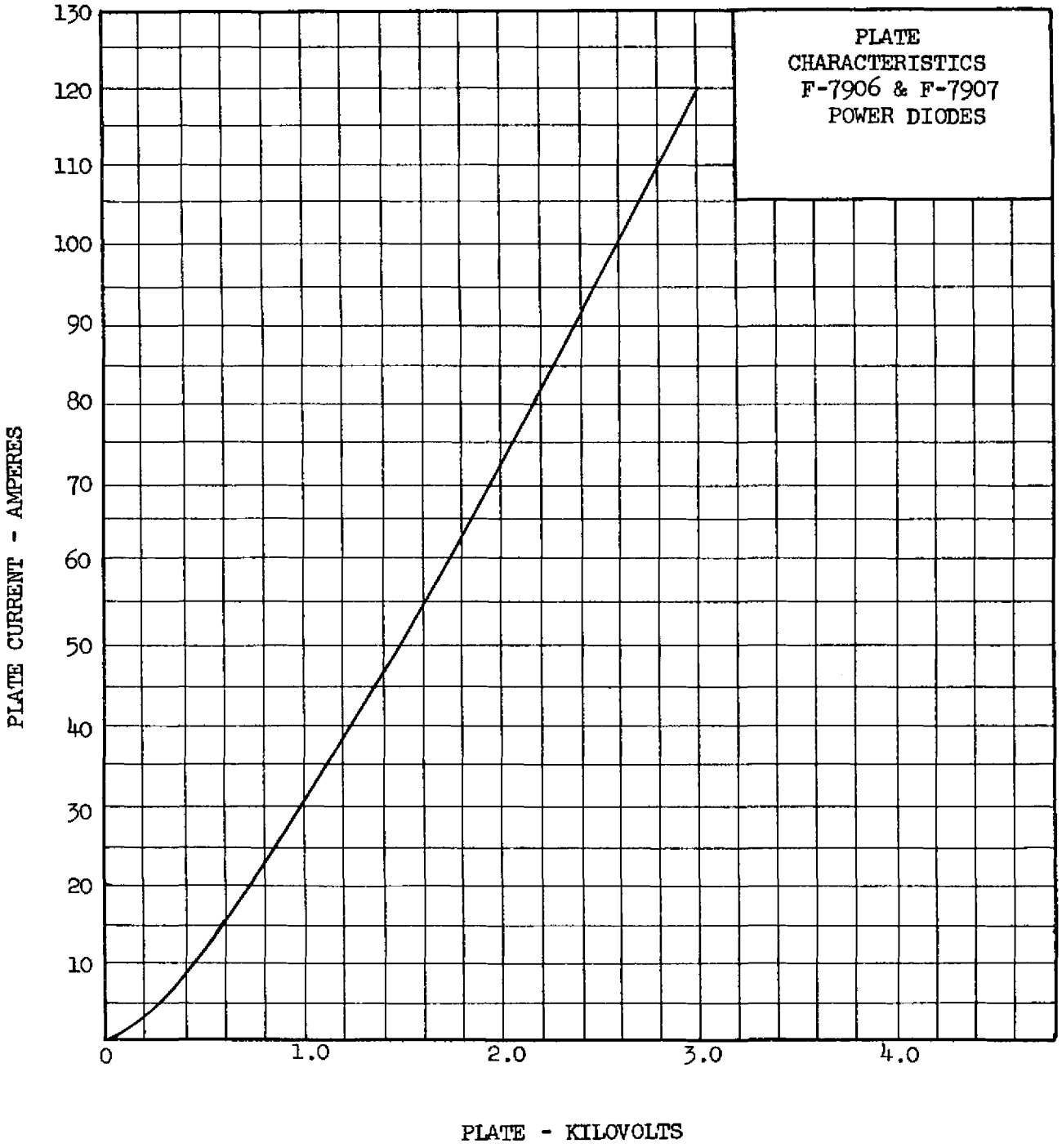
PLATE
CHARACTERISTICS
F-7906 & F-7907
POWER DIODES
130
120
110
100
90
80
70
60
50
40
30
20
10
PLATE CURRENT - AMPERES
0
1.0
2.0
3.0
4.0
PLATE - KILOVOLTS

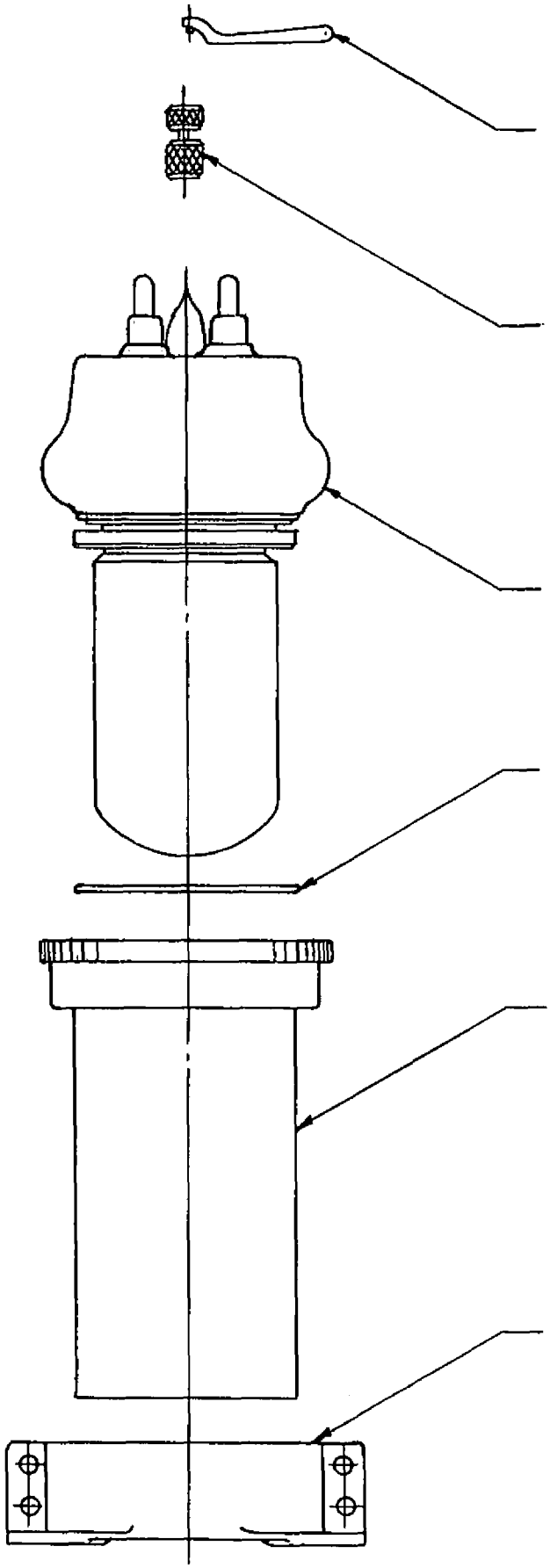

ACCESSORIES

Terminals

Fil. #1 - Yellow
Fil. #2 - Red

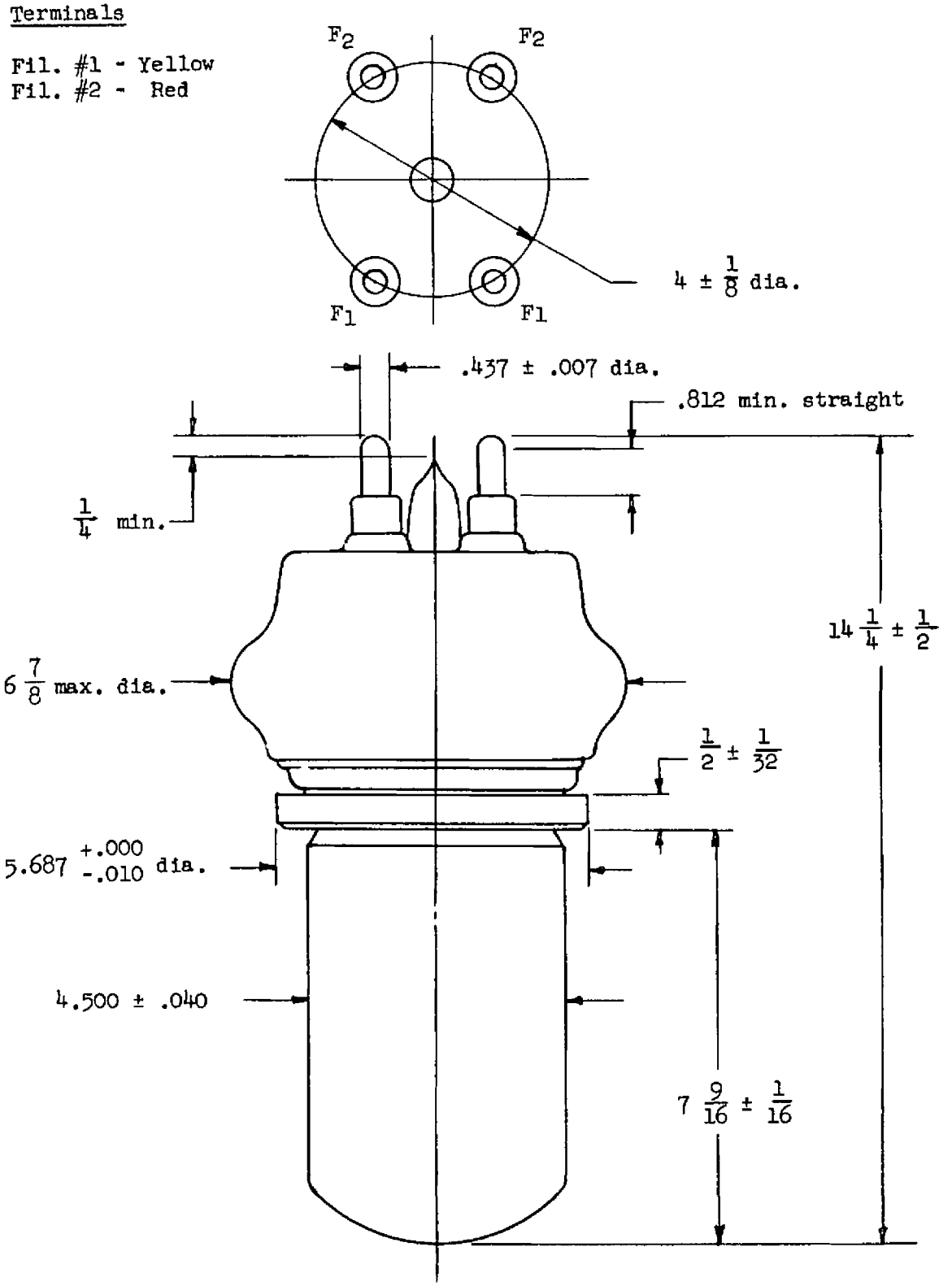

OUTLINE

F-7906 POWER DIODE

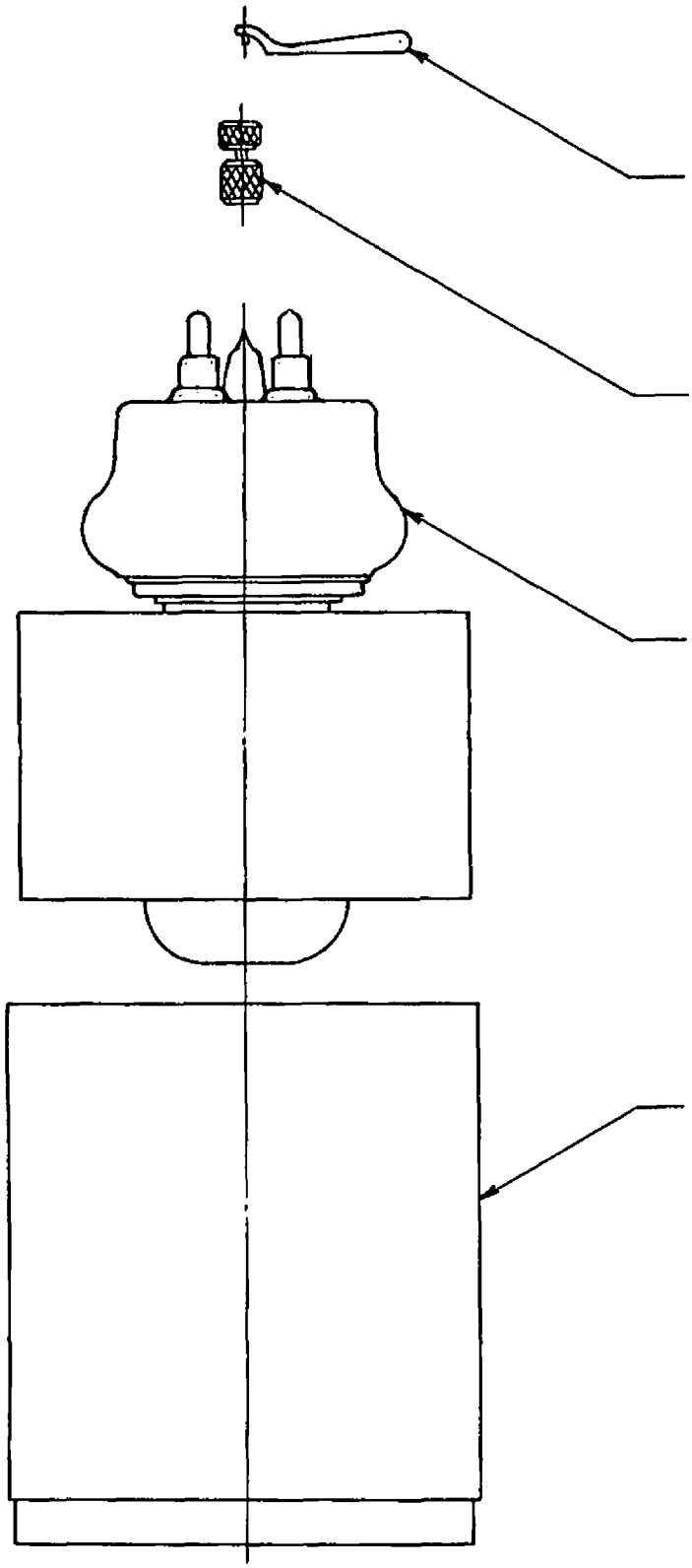

ACCESSORIES

Terminals

Fil. #1 - Yellow
Fil. #2 - Red

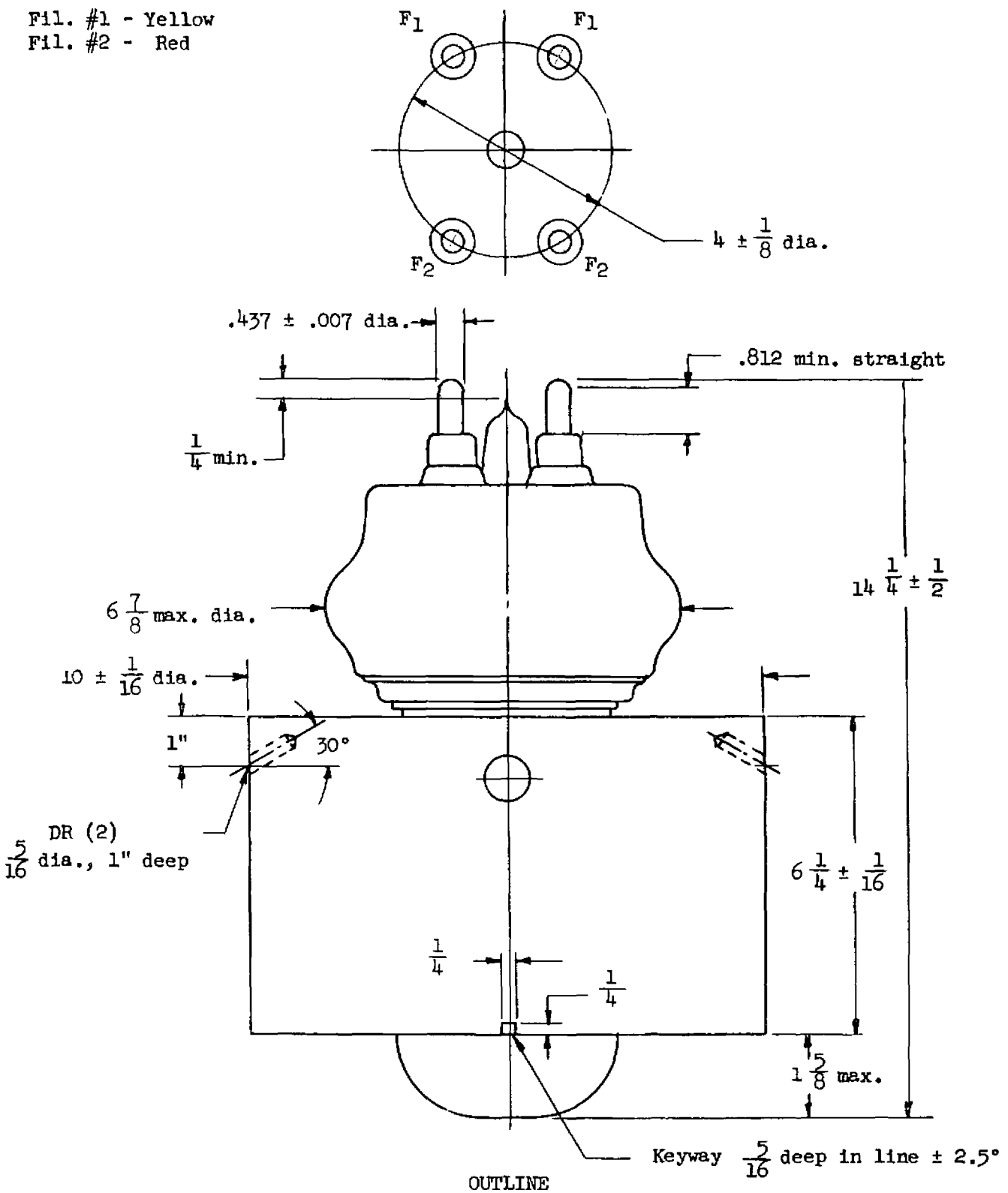

OUTLINE
F-7907 POWER DIODE