TUNG-SOL

PRODUCT BULLETIN

INDUSTRIAL ELECTRON TUBE TYPE 7872

SEPTEMBER, 1963

HYDROGEN THYRATRON

DESCRIPTION — The 7872 is a three-electrode, hydrogen-filled thyratron designed for high-power switching applications.

A hydrogen reservoir, with a separate external base connection, promotes long life and permits optimum pressure adjustment for various operating conditions. The control grid is brought out to both a base pin and to a grid ring for flexibility in circuit design. Termination to the grid ring is made in applications where grid lead inductance is critical.

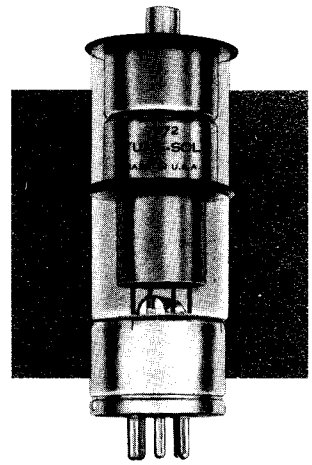

ELECTRICAL DATA

	Min	Bogey	Max	
Heater Voltage	5.8	6.3	6.8	Volts
Heater Current — E_f = 6.3 Volts	5	—	9	Amperes
Cathode Heating Time	3	—	—	Minutes
Reservoir Voltage	3	Marked on Base	6.8	Volts
Reservoir Current	2	—	4	Amperes
Reservoir Heating Time	3	—	—	Minutes
Anode Voltage Drop	75	—	150	Volts
Ambient Temperature	−50	—	+90	Degrees Centigrade

MECHANICAL DATA

Type of Cooling	Convection
Mounting Position	Any
Maximum Net Weight	16 Ounces
Base	JEDEC A5-109

RATINGS — ABSOLUTE VALUES

	Min	Max	
Anode Voltage — Peak			
Forward	—	18,000	Volts
Inverse — Note 1	—	18,000	Volts
Cathode Current			
Peak	—	365	Amperes
Average	—	250	Milliamperes
RMS	—	7	Amperes
D-C Anode Voltage	3,000	—	Volts
Grid Voltage — Peak — Note 2	200	500	Volts
Heating Factor — epy x ib x prr	—	5×10^9	
Current Rate of Rise	—	1,500	Amperes per microsecond
Anode Delay Time	—	0.6	Microseconds
Time Jitter — Note 3	—	0.005	Microseconds

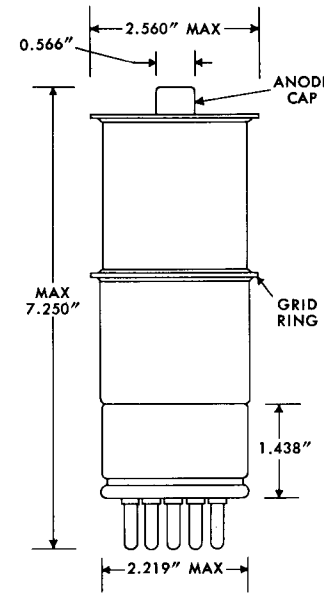

OUTLINE DRAWING

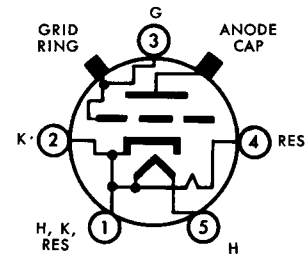

BASING DIAGRAM BOTTOM VIEW

NOTES:

1. In pulsed operation, the peak inverse voltage, exclusive of a 0.05 microsecond maximum duration, shall not exceed 5 kilovolts during the first 25 microseconds after the pulse.
2. The driver pulse is measured at the tube socket with the thyratron grid disconnected. Time of rise equals 0.5 microsecond maximum, grid pulse duration equals 2 microseconds minimum, and impedance of driver circuit equals 500 ohms maximum.
3. The time jitter limit as stated is the maximum allowable variation in firing time measured at 50 percent of pulse amplitude after the tube has been operating for at least 60 seconds. The maximum jitter as stated is only valid at anode voltages of 5 kilovolts and above.