Vacuum tube 7868EH is a beam tetrode in the glass bulb, with equipotential cathode, designed to amplify low frequency power in radio engineering devices.

Pin arrangement

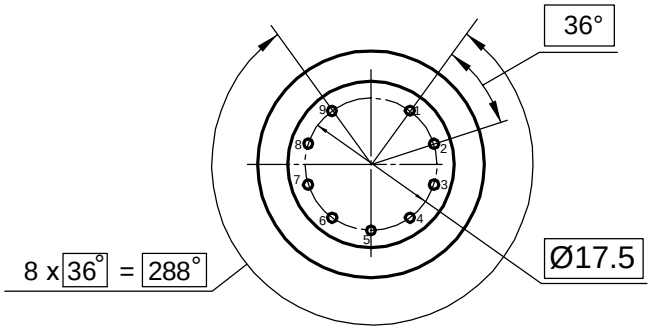

Electrode -to - lead connection diagram

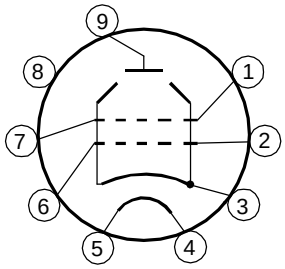

Dimensions

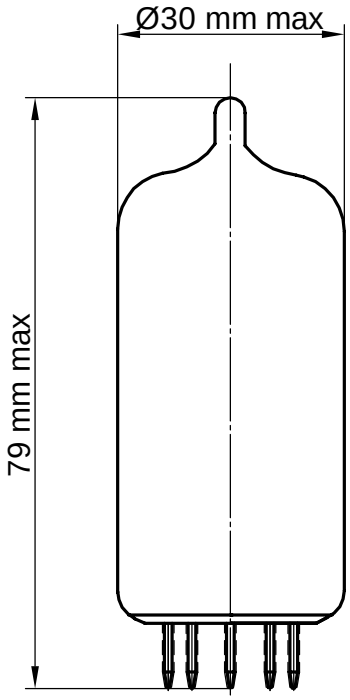

Lead designation	Name of electrode
1, 7	Grid 2
2, 6	Grid 1
3	Cathode, beam-forming screen
4, 5	Heater
8	Empty
9	Plate

Electrical parameters

Parameters, conditions and units	Nominal	
	min	max
First grid reverse current, µA (at: filament voltage 6.3 V, plate voltage 300 V, first grid voltage minus 10.0 V, second grid voltage 300 V,first grid circuit resistance 0.3M Ω)	—	0.7
Heater current, A	0.7	0.9
Plate current, mA (at: filament voltage 6.3 V, plate voltage 300 V, first grid voltage minus 10.0 V, second grid voltage 300 V)	50	86
Second grid current, mA (at: filament voltage 6.3 V, plate voltage 300 V, first grid voltage minus 10.0 V, second grid voltage 300 V)	—	10
Output power, W (at: filament voltage 6.3 V, plate voltage 300 V, first grid voltage minus 10.0 V, second grid voltage 300 V, plate circuit resistance 3.0 k Ω first grid alternating voltage, efficacious 7.1 V)	7.0	—
First grid cut-off voltage, negative, V (at: filament voltage 6.3 V, plate voltage 300 V, second grid voltage 300 V,)	—	38
Slope of characteristic, mA/V (at: filament voltage 6.3 V, anode voltage 300 V, first grid voltage minus 10.0 V, second grid voltage 300 V)	8.4	11.4
Distortion factor,% (at: filament voltage 6.3 V, plate voltage 300 V, first grid voltage minus 10 V, second grid voltage 300 V, plate circuit resistance 3.0 kΩ, first grid alternating voltage,efficacious 7.1 V)	—	17.0
Cahtode - heater insulation resistance, M Ω (at: filament voltage 6.3 V, cathode -heater voltage ± 200 V)	6.6	—

Operating conditions limits.

Parameters, units	Nominal	
	min	max
Filament voltage, V	5.7	7.0
Cathode - heater voltage, V	—	± 200
Cathode current, mA	—	90
Power dissipation at the plate, W	—	19
Power dissipation at the second grid, W	—	3.3
First grid circuit resistance ,M Ω fixed bias self - bias	 — —	 0.3 1.0
Temperature at the most heated part of the envelope, K°	—	513

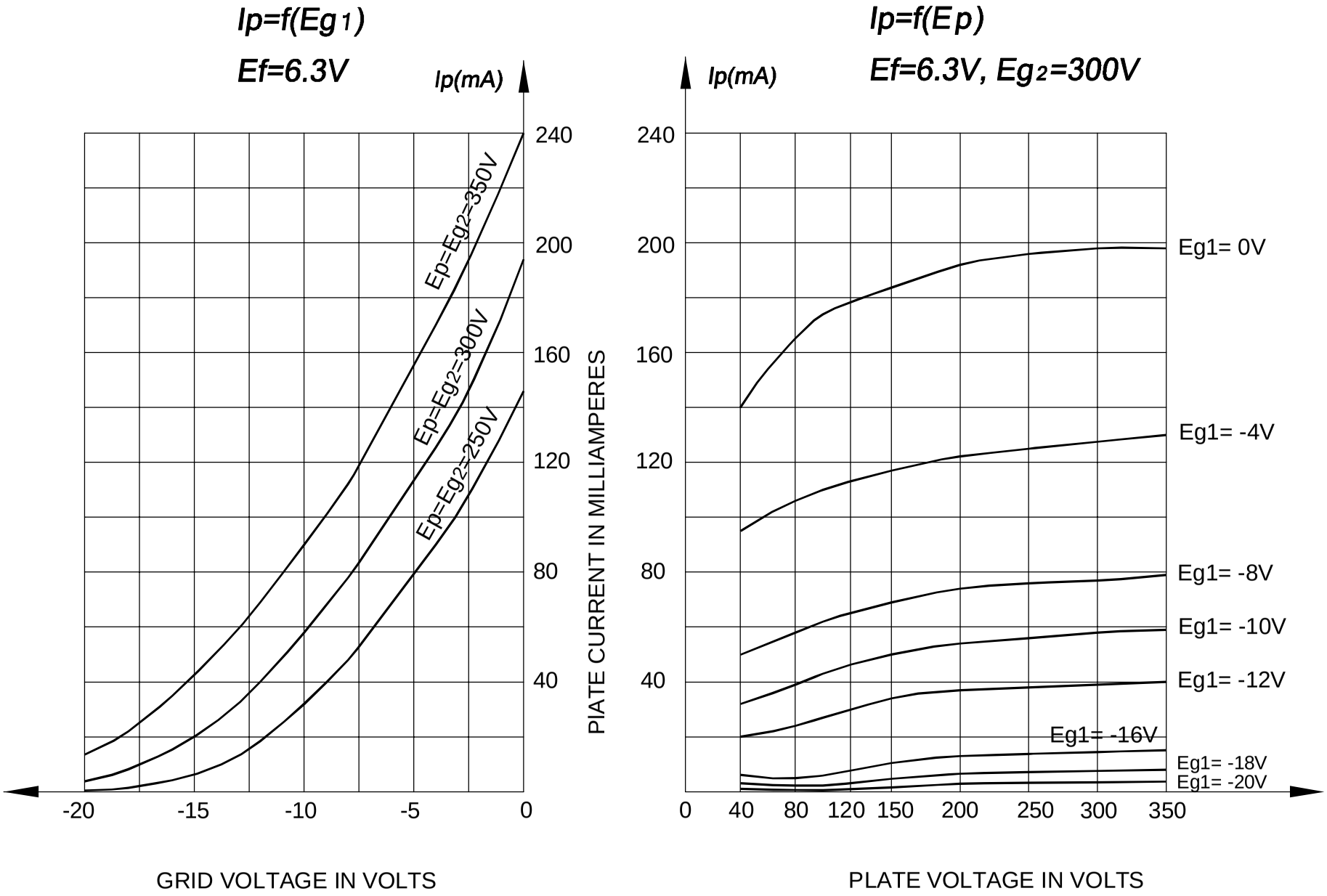
Ip=f(Eg1)
Ef=6.3V
Ip(mA)
240
200
160
120
80
40
Ep=Eg2=350V
Ep=Eg2=300V
Ep=Eg2=250V
-20
-15
-10
-5
0
GRID VOLTAGE IN VOLTS
PIATE CURRENT IN MILLIAMPERES
Ip=f(Ep)
Ef=6.3V, Eg2=300V
Ip(mA)
240
200
160
120
80
40
Eg1= 0V
Eg1= -4V
Eg1= -8V
Eg1= -10V
Eg1= -12V
Eg1= -16V
Eg1= -18V
Eg1= -20V
0
40
80
120
150
200
250
300
350
PLATE VOLTAGE IN VOLTS