TUNG-SOL

PRODUCT BULLETIN

INDUSTRIAL ELECTRON TUBE TYPE 7793

MARCH, 1964

HYDROGEN DIODE

DESCRIPTION — The 7793 is an indirectly heated, hydrogen filled, half-wave diode for use in high-voltage rectifier, clipper, or backswing diode applications. It has a hydrogen reservoir with external electrical connections to assure long life and stable operation.

The rugged 7793 can handle higher voltage than comparable xenon tubes. The range of ambient operating temperatures and the variety of mounting positions are greater for the 7793 than is possible with mercury vapor tubes. This diode has a greater safety factor for voltage and current surges than is practical in semi-conductor stacks.

The 7793 employs flange mounting for minimum overall height, good electrical connections, and ease of installation.

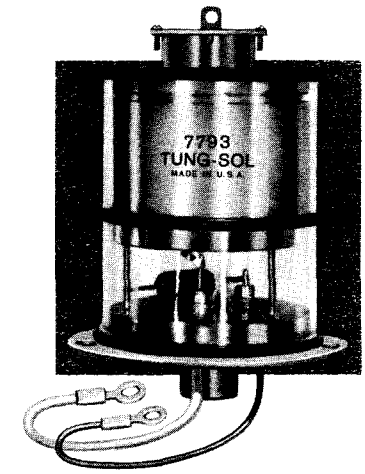

See Page 2 for Outline Drawing

ELECTRICAL DATA

	Min	Bogey	Max	
Heater Voltage	4.75	5.0	5.25	Volts
Heater Current $-E_f = 5.0$ Volts	18	21.5	25	Amperes
Reservoir Voltage	4.75	5.0	5.25	Volts
Reservoir Current $-E_r = 5.0$ Volts	3.0	4.0	5.0	Amperes
Cathode Heating Time	3	—	—	Minutes
Anode Voltage Drop	30	—	60	Volts
Initial Firing Voltage	—	—	100	Volts
Recurrent Firing Voltage	30	—	75	Volts

MECHANICAL DATA

Type of Cooling	Forced Air —50 cfm directed into anode stem—See Mounting Data Drawing
Mounting Position	Horizontal or Vertical (Base Down)
Average Net Weight	1 Pound 13 Ounces
Dimensions	See Outline Drawing
Mounting Data	See Mounting Data Drawing
Anode Connection	See Outline Drawing
Heater Connection	8 ± ½-inch long yellow lead with yellow lug for ¼-inch diameter screw
Reservoir Connection	8 ± ½-inch long red lead with red lug for ¼-inch diameter screw

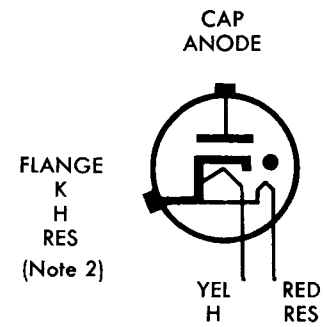

BASING DIAGRAM

RATINGS, ABSOLUTE VALUES

	SHUNT DIODE SERVICE Minimum	SHUNT DIODE SERVICE Maximum	RECTIFIER SERVICE Minimum	RECTIFIER SERVICE Maximum	
Peak Inverse Anode Voltage—Note 1	—	30,000	—	30,000	Volts
Cathode Current					
Peak	—	1,500	—	16	Amperes
Average	—	1.0	—	4	Amperes
RMS	—	40	—	—	Amperes
Fault —0.1 Second Maximum Duration	—	2,000	—	90	Amperes
Averaging Time	—	—	—	15	Seconds
Ambient Temperature	−55	+75	−55	+75	Degrees Centigrade
Altitude	—	10,000	—	10,000	Feet

NOTES:

1. See Rectifier Rating Graph on page 2.
2. **CAUTION** — In order to avoid damage to tube, the cathode connection must be made to the base flange only.

TYPE 7793

MAXIMUM RATING CHART FOR INFINITE INDUCTANCE CHOKE INPUT FILTER

FIG.	CIRCUIT	TRANSFORMER	NO. OF TUBES	*	A-C SECONDARY VOLTAGE E_{RMS} Kilovolts	D-C OUTPUT — APPROX		RIPPLE	
						E_{DC} Kilovolts	I_{DC} AMPS	KILOVOLTS RMS	FREQ
2	Full-wave 1-phase	1-phase C-T	2	A B	8.85 10.6	7.95 9.56	8.00 6.00	3.75 4.50	2f
3	Bridge circuit 1-phase	1-phase	4	A B	17.7 21.2	15.9 19.1	8.00 6.00	7.50 9.00	2f
4	Half-wave 3-phase	Delta-Wye	3	A B	10.2 12.2	11.9 14.3	12.0 9.00	2.11 2.54	3f
5	Full-Wave 3-phase	Delta-Wye	6	A B	10.2 12.5	23.8 28.6	12.0 9.00	0.915 1.16	6f
6	Full-wave 3-phase	Delta-Delta	6	A B	17.6 21.2	23.8 28.6	12.0 9.00	0.915 1.16	6f

* See RATING GRAPH
A: Forced air cooled at maximum current rating.
B: Forced air cooled at maximum voltage rating.

For figure references see STANDARD RECTIFIER CIRCUITS AND RATINGS sheet.
The 7793 should be protected from transient voltages in excess of the maximum rating by spark gaps installed either directly across the tube or across each plate transformer secondary leg.

RECTIFIER RATING GRAPH

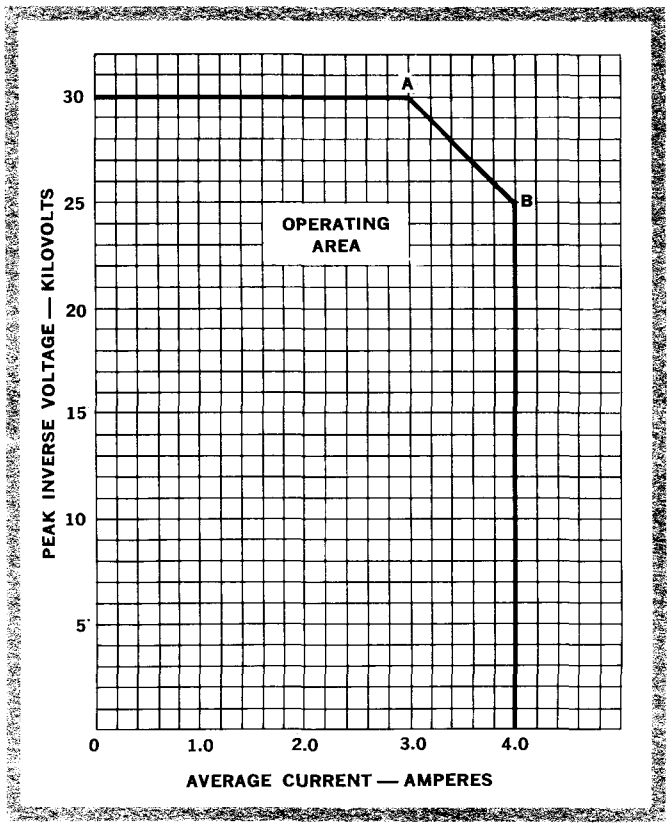

OUTLINE DRAWING AND MOUNTING DATA

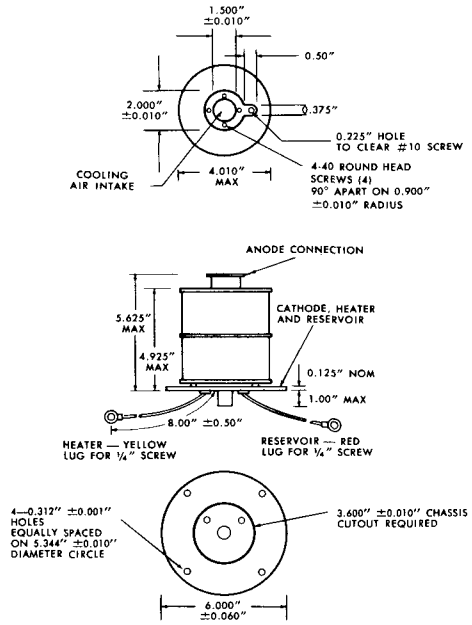

HEATER AND RESERVOIR LUG DETAIL
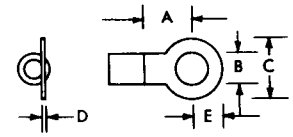
Symbol	Dimension
A	0.380" MIN
B	0.260" – 0.313"
C	0.605" MAX
D	0.04" MIN
E	0.305" MAX