CERAMIC HYDROGEN THYRATRON

DESCRIPTION:

THE 7782/KU-71 IS A UNIPOTENTIAL CATHODE THREE ELEMENT HYDROGEN THYRATRON OF CERAMIC METAL CONSTRUCTION DESIGNED FOR USE IN COMPACT MODULATORS FOR HIGH PERFORMANCE RADARS AND FOR MISSILE APPLICATIONS.

ELECTRICAL DATA, GENERAL:

	NOM.	MIN.	MAX.	
HEATER VOLTAGE	6.3	5.8	6.8	VOLTS A.C.
* HEATER CURRENT (AT 6.3 VOLTS)	5.5	3.5	7.0	AMPERES
* RESERVOIR VOLTAGE	6.3	5.8	6.8	VOLTS A.C.
* RESERVOIR CURRENT (AT 6.3 VOLTS)	1.5	1.0	2.5	AMPERES
* MINIMUM HEATING TIME		3		MINUTES

MECHANICAL DATA, GENERAL:

MOUNTING POSITION	ANY
DIMENSIONS	PER OUTLINE

RATINGS:

* MAX. PEAK ANODE VOLTAGE, FORWARD	12.0	KILOVOLTS
* MAX. PEAK ANODE VOLTAGE, INVERSE (NOTE 1)	12.0	KILOVOLTS
MIN. ANODE SUPPLY VOLTAGE	0.3	KILOVOLTS D.C.
MAX. PEAK ANODE CURRENT	200.0	AMPERES
MAX. AVERAGE ANODE CURRENT	200.0	MILLIAMPERES
MAX. RMS ANODE CURRENT (NOTE 2)	5.0	AMPERES A.C.
MAX. EBY X IBX X PRR (PB)	4.0×10^9	
MAX. ANODE CURRENT, RATE OF RISE	2000	AMPS./U SEC.
PEAK TRIGGER VOLTAGE (NOTE 3)		
MAX. PEAK INVERSE TRIGGER VOLTAGE	200	VOLTS
MAX. ANODE DELAY TIME (NOTE 4)	0.50	U SECOND
MAX. ANODE DELAY TIME DRIFT	0.10	U SECOND
MAX. TIME JITTER (NOTE 5)	.005	U SECOND
AMBIENT TEMPERATURE	-50° TO +150°	C
SHOCK RATING	500	G.
VIBRATION	30	G.

* INDICATES CHANGES FROM DATA SHEET DATED 10-60

** THIS TUBE WAS PREVIOUSLY DESIGNATED BY THE TYPE NUMBER KU-71.

NOTE 1:

THE PEAK INVERSE VOLTAGE SHOULD NOT EXCEED 2.5 KV DURING THE FIRST 25 MICROSECONDS AFTER THE PULSE.

NOTE 2:

THE ROOT MEAN SQUARE ANODE CURRENT SHALL BE COMPUTED AS THE SQUARE ROOT OF THE PRODUCT OF THE PEAK CURRENT AND THE AVERAGE CURRENT.

NOTE 3:

THE DRIVER PULSE, MEASURED AT THE TUBE SOCKET WITH THE THYRATRON GRID DISCONNECTED SHOULD HAVE THE FOLLOWING CHARACTERISTICS:

A.	VOLTAGE	175 VOLTS (MIN.)
B.	DURATION	2 MICROSECONDS (AT 70 PERCENT POINTS)
C.	IMPEDANCE	1500 OHMS (MAX.)
D.	TIME OF RISE	0.5 MICROSECOND (MAX.)

THE LIMITS OF ANODE TIME DELAY AND ANODE TIME JITTER ARE BASED ON THE MINIMUM TRIGGER. USING THE HIGHEST PERMISSIBLE TRIGGER VOLTAGE AND LOWEST TRIGGER SOURCE IMPEDANCE MATERIALLY REDUCES THESE VALUES BELOW THE LIMITS SPECIFIED.

NOTE 4:

THE TIME OF ANODE DELAY IS MEASURED BETWEEN THE 26 PERCENT POINT ON THE RISING PORTION OF THE UNLOADED GRID VOLTAGE PULSE AND THE POINT AT WHICH EVIDENCE OF ANODE CONDUCTION FIRST APPEARS ON THE LOADED GRID PULSE.

NOTE 5:

TIME JITTER IS MEASURED AT THE 50 PERCENT POINT ON THE ANODE CURRENT PULSE.

ADDITIONAL INFORMATION FOR SPECIFIC APPLICATIONS CAN BE OBTAINED FROM THE

ELECTRON TUBE APPLICATIONS SECTION
ITT COMPONENTS DIVISION
POST OFFICE BOX 412
CLIFTON, NEW JERSEY

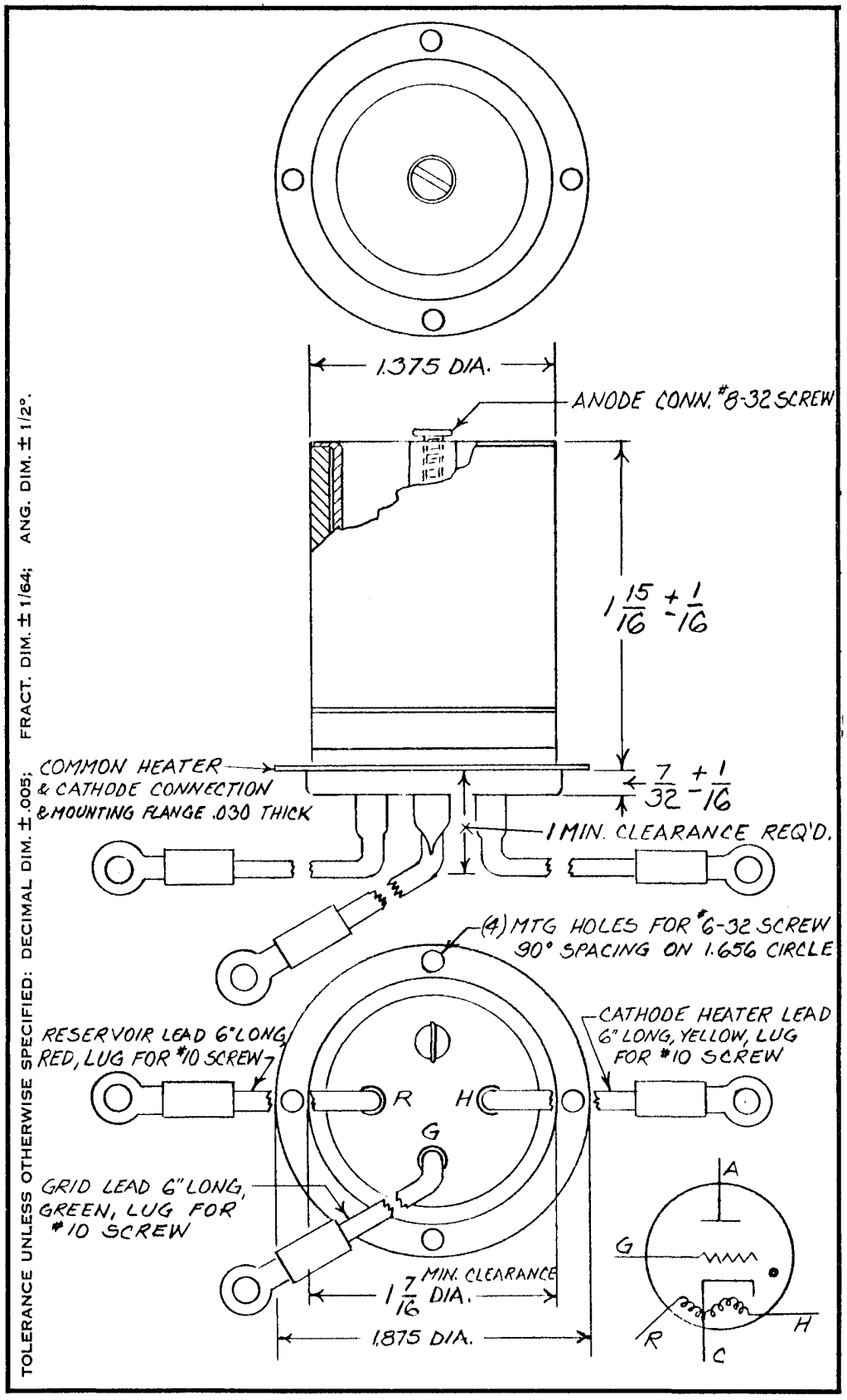
1.375 DIA.
ANODE CONN. #8-32 SCREW
1 15/16 +1/16 -1/16
COMMON HEATER & CATHODE CONNECTION & MOUNTING FLANGE .030 THICK
7/32 +1/16 -1/16
1 MIN. CLEARANCE REQ'D.
(4) MTG HOLES FOR #6-32 SCREW 90° SPACING ON 1.656 CIRCLE
RESERVOIR LEAD 6" LONG, RED, LUG FOR #10 SCREW
CATHODE HEATER LEAD 6" LONG, YELLOW, LUG FOR #10 SCREW
R
H
G
GRID LEAD 6" LONG, GREEN, LUG FOR #10 SCREW
1 7/16 MIN. CLEARANCE DIA.
1.875 DIA.
A
G
R
H
C
TOLERANCE UNLESS OTHERWISE SPECIFIED: DECIMAL DIM. ±.005; FRACT. DIM. ±1/64; ANG. DIM. ±1/2°.
OUTLINE 7782