TYPE CK7702

The CK7702 is a dual-gun cathode-ray recording storage tube capable of simultaneous writing and reading. It is an electronic input-electronic output storage device which combines high output signal with high resolution. The major application is scan conversion such as radar PPI to television type presentation. This makes possible bright video display, with high resolution and adjustable automatic priming or erasing, which may be used to generate target trails indicating elapsed time position.

Stored signals can be held for many hours, read several thousand times, or erased in a fraction of a second if desired. The storage capabilities permit additional coherence of target information under conditions of high noise levels.

Both the writing and reading guns use magnetic deflection and can be operated with either electrostatic or magnetic focus or a combination of both.

The design of the tube results in a wide dynamic range of gray shades fast writing speeds, and selective erasure of the stored information is desired.

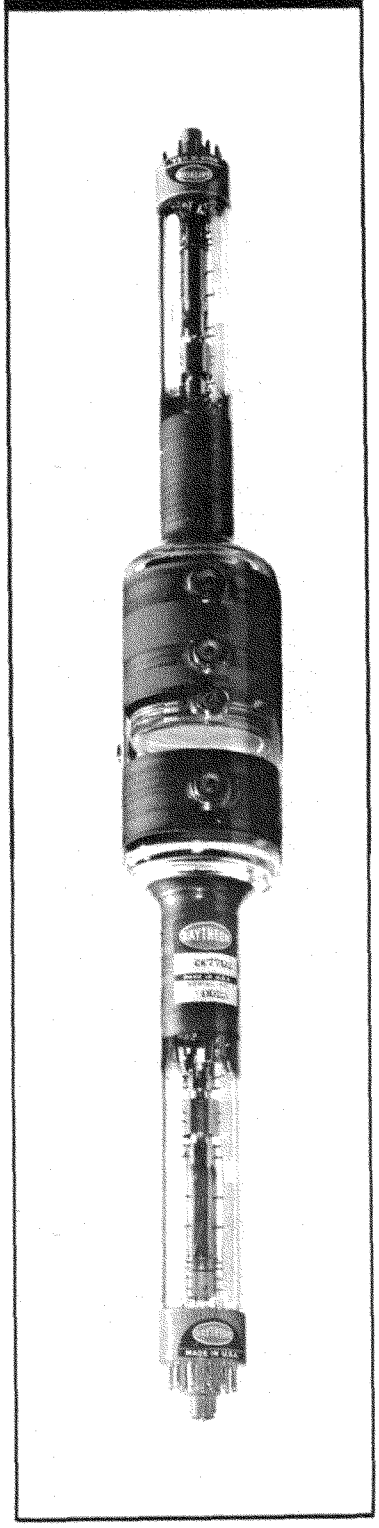

GENERAL CHARACTERISTICS

Gun Locations	Co-axial
Gun Type (Both Guns)	Tetrode High Resolution
Deflection (Both Guns)	Magnetic
Max. Deflection Angle (Both Guns)	30°
Focusing	Electrostatic or Magnetic
Mounting Position	Any
Resolution (Magnetic Focus) TV lines per diameter	1200 lines minimum
Resolution (Electrostatic Focus) TV lines per diameter	800 lines nominal
Output Capacitance (Collector & Write Decelerator to all other elements)	19 $\mu\mu f$ (approx.)
Erasing Technique	By Switching or Automatic

MECHANICAL CHARACTERISTICS

Seated Length	22 7/8" Nominal
Bulb Diameter	3" Maximum
Neck Diameters	1 1/2" Maximum
Bases (Both Ends)	Special High Altitude MI #5025
Storage Assembly Buttons	JEDEC Type J1-22

ELECTRICAL CHARACTERISTICS

HEATER:

Heater Voltage	6.3+ 10% volts
Heater Current	0.6 amp.

RATINGS-ABSOLUTE MAXIMUM VALUES:

Anode Voltage	4000 Vdc
Grid Voltage Positive	0 Vdc
Grid Voltage Negative	-150 Vdc
Grid #2 Voltage	700 Vdc
Inter Screen Voltage (Between any pair)	500 Vdc
Anode #2 (Focus) Electrode Voltage	4000 Vdc
Grid Circuit Resistance	0.5 Meg.
Heater Cathode Voltage	
Heater Positive	+ 10 Vdc
Heater Negative	-125 Vdc

Tentative Data

TYPICAL OPERATING CHARACTERISTICS

The CK7702 may be operated sequentially through erasing, priming and writing. Conditions for this type of operation are shown in Mode #1. Reading in this mode can be simultaneous if desired, by scanning with the read beam in operation during the write voltage conditions.

Mode #2 describes operation of the tube with the automatic prime (erase) feature. This permits simultaneous reading with controllable erasure.

WRITE GUN (Magnetic Deflection) See Note 5

	MODE #1	MODE #2
Cathode	0 Vdc	0 Vdc
G–1 Cut–off	–40 Vdc	–40 Vdc
G–2	400 Vdc	400 Vdc
Anode	3500 Vdc	3500 Vdc
Focus Electrode (Note 1)	400 Vdc	400 Vdc
Focus Electrode (Note 2)	3500 Vdc	3500 Vdc
Collimating Lens	300 Vdc	300 Vdc
Write Decelerator	500 Vdc	Variable See Note 4
Collector	500 Vdc	

READ GUN (Magnetic Deflection) See Note 5

Cathode	Ekr Note 3	200 Vdc
G–1 Cut–off	Ekr–110 Vdc	+ 110 Vdc
G–2	Ekr+ 400 Vdc	600 Vdc
Anode	Ekr+ 3500 Vdc	3700 Vdc
Focus Electrode (Note 1)	Ekr+ 400 Vdc	600 Vdc
Focus Electrode (Note 2)	Ekr+ 3500 Vdc	3700 Vdc
Decelerator	Ekr+ 500 Vdc	700 Vdc
Collimating Lens 1	Ekr+ 500 Vdc	700 Vdc
Collimating Lens 2	Ekr+ 300 Vdc	500 Vdc
Storage Screen	Ekr+ 5 Vdc	205 Vdc

Note 1: If electrostatic focus is used.

Note 2: If magnetic focus is used.

Note 3: In Mode #1, the read cathode gun potential will be switched during the various operations.
The values of Ekr (voltage from write cathode to read cathode) are as follows:

Erase	+ 300 Vdc
Prime	+ 10 Vdc
Write and Read Simultaneous	+ 300 Vdc

Note 4: Gradual automatic priming is controllable by varying the value of collector and decelerator voltage from 500 Vdc (for slow erasing) down to 200 Vdc (for fast erasing). The same effect may also be achieved by varying the value of read cathode from 200 Vdc (for slow erasing) to 500 Vdc (for fast erasing) while keeping all read gun voltages the same with respect to read cathode.

Note 5: Deflection drive in at least one direction must be applied to both guns whenever the tube is conducting to avoid damage to the storage assembly.

DETAILED ELECTRICAL INFORMATION

In Mode #1 operation in order to erase and write a picture on the storage screen, the storage screen must be about 300 Vdc positive with respect to the write gun cathode. For priming the storage screen must be about 30 Vdc positive to the write gun cathode. While all of these modes are in operation, the storage screen must remain about 20 volts positive with respect to the read gun cathode.

In Mode #2 one technique for simultaneous writing and reading is RF modulation of the read beam. The output signal is obtained from the collector and write decelerator. Video cancellation techniques may also be practical.

PRINCIPLES OF OPERATION

When an electron beam strikes any material, secondary electrons are emitted. The quantity of secondary electrons emitted is a function of the velocity of the primary electron beam.

The secondary electron emitting surface in the Recording Storage Tube is a dielectric that has been deposited on a metal mesh or screen. Figure 1 illustrates this storage screen mesh. This screen has more than 2000 cross wires per diameter.

Figure 2 shows the characteristic curve for secondary to primary emission ratio for the dielectric material used. Since the velocity of the electron beam will be proportional to the voltage on the dielectric material the ordinate of velocity in Figure 2 can be voltage. The crossover, called critical potential, where the secondary to primary ratio is unity occurs at approximately 50 volts.

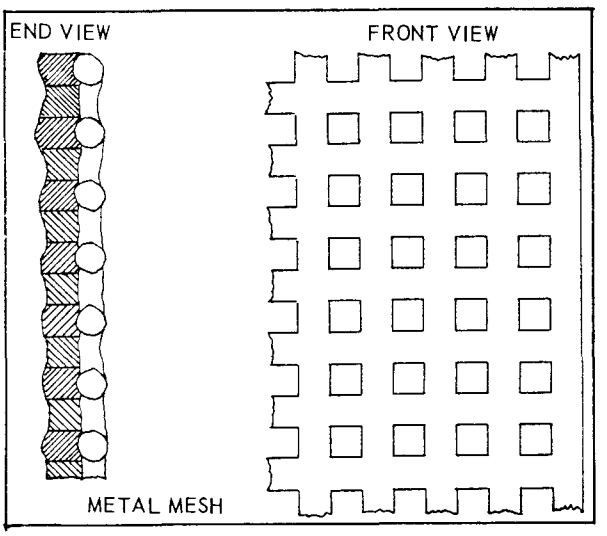

FIGURE 1
MAGNIFIED SECTION OF STORAGE SCREEN

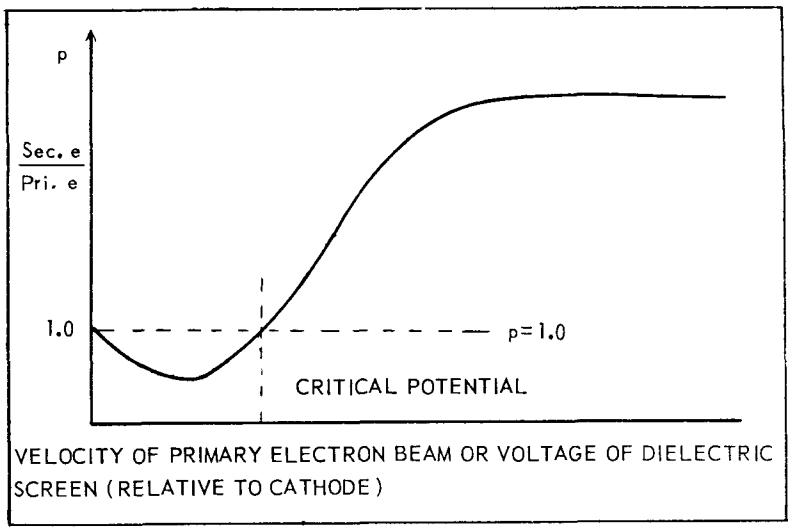

FIGURE 2
SECONDARY EMISSION CHARACTERISTIC
OF RECORDING STORAGE TUBE DIELECTRIC

Using the secondary emission character shown by Figure 2, the dielectric screen surface can be discreetly charged or discharged as a function of the potential on the metal screen and the position and magnitude of the primary electron beam.

The various modes of operation are described as follows:

PRIME - This is the basic form of erasure and prepares the storage screen for subsequent writing. It is accomplished by scanning the storage screen dielectric with an unmodulated beam. The storage screen mesh is operated at a voltage below critical potential and since the secondary to primary emission ratio is less than unity the dielectric surface can store electrons and become negatively charged to cathode gun potential. A total prime can be used if complete erasure of old patterns is desired or a partial prime can be used if it is desired to gradually decrease old signals in

PRIME (cont'd.)
amplitude (e.g.: to generate target trails in radar). Selective priming of only part of the storage screen can be accomplished by only scanning the area where it is desired to erase previously stored information. Typical storage screen voltage for prime is +20 volts.

WRITE - "Writing" of the charge pattern is accomplished by modulation of a scanning electron beam and operation at a storage screen voltage that yields a high secondary to primary emission ratio. This is any voltage above critical potential and is nominally 300 volts for fastest writing speeds. Since during the prime mode the dielectric surface was negatively charged, the surface is discreetly discharged towards the positive direction by the writing beam. As the modulated beam scans over the surface varying amounts of secondary electrons depending on the instantaneous beam amplitude are emitted at the surface and the stored pattern is established. Fastest writing time is approximately .01 usec. per stored element for max. stored signal.

READ - Once a charge pattern has been written in, it can be read out by scanning the storage screen with an unmodulated beam. The storage screen is operated at 5 to 15 volts, with respect to the reading gun cathode. The dielectric surface with its charged pattern is now actually negative with respect to the electron gun cathode. Depending on the charged pattern the electron beam is therefore modulated as it passes through the storage screen to the collector element. By selecting the proper storage screen voltage the most negative areas of the dielectric (established by the prime mode) can completely cut off the electron beam from the collector and thus the "black" level is established. Various gray shades will appear in any areas where the dielectric is less negative. This is shown in Figure 3.

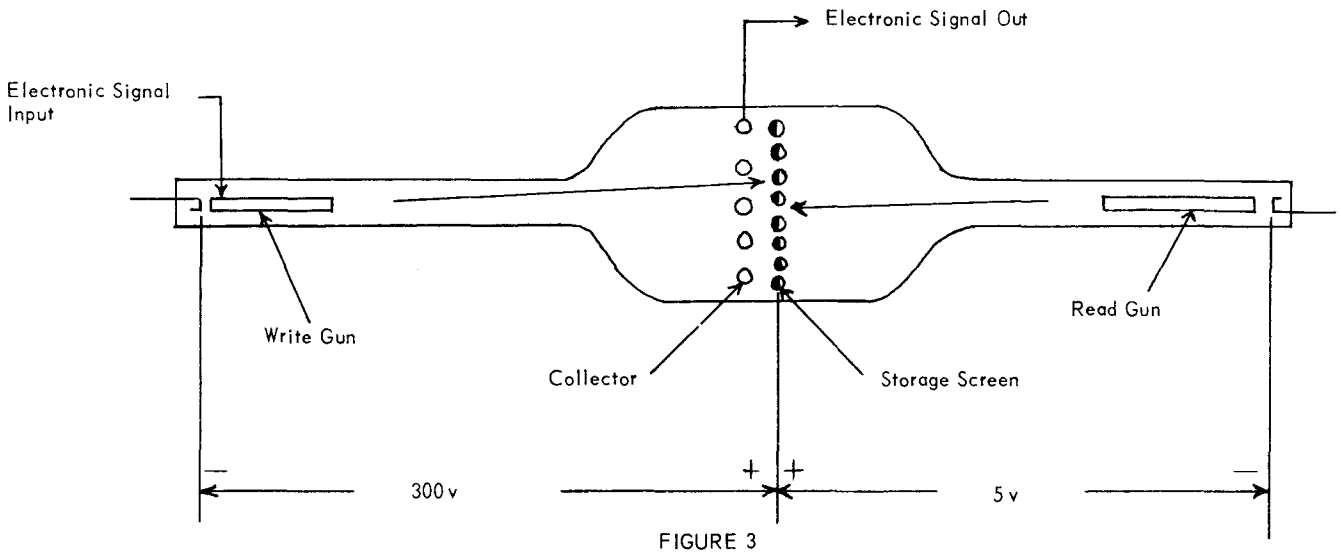

FIGURE 3
TWO GUN RECORDING STORAGE TUBE – SIMPLIFIED DRAWING

READ (cont'd.)

Long storage time with readout is possible because the storage dielectric in the read mode is negative with respect to the electron gun cathode and therefore the electron beam does not strike the dielectric surface.

Simultaneous Write and Read modes are possible with the use of two electron guns. This is desirable in most scan-conversion applications. Since two independent potentials can be maintained on the storage screen with respect to the two electron gun cathodes, the tube can be truly writing a charge pattern and reading it at the same time.

Since the collector is a metal screen that is scanned across by the writing beam some write information signal appears in the collector output. This can be removed by cancellation techniques or by use of RF modulation of the reading beam. The signal output by the RF method is an RF carrier signal with the charge pattern as amplitude modulation. It can be amplified with usual RF amplifiers and detected for subsequent display. Usual RF frequencies used are 30 mc. or 60 mc.

ERASE - Where total erasure is needed, it is frequently desirable to operate the tube in the positive erase mode. To accomplish this, the storage screen voltage is set at or above the value used for Write and the storage surface is scanned with an unmodulated electron-beam. This action discharges any stored pattern, bringing the whole storage surface to a uniform equilibrium potential. The tube must then be primed prior to subsequent writing.

SPECIAL APPLICATION NOTES:

AUTOMATIC PRIME - During simultaneous writing and reading the tube can be operated at conditions that will allow either short or long storage of the charge pattern. It can also be variable for storage time between the two limits. Thus, in PPI to TV scan-conversion, target trails can be generated and the length of these trails are controllable by adjusting the storage time. This gradual automatic prime is obtained by varying the value of collector voltage from a high voltage for long storage (slow Prime) to a low voltage for short storage (fast Prime).
The priming is accomplished by some of the electrons between the collector and storage screen dielectric returning to the dielectric to recharge it negatively in the specific areas where the negative charge was reduced by the written-in pattern.

COLLIMATION - Electrostatic lenses and deceleration screens are provided to collimate the beam as it arrives in the region of the storage screen. For optimum shading characteristics the reading and writing beam should arrive at the storage screen dielectric orthognally to it. The voltage on the lenses should therefore be adjusted for the most uniform background shading.

SHIELDING - Since any extraneous fields will cause unwanted deflection, it is recommended that good magnetic and electrostatic shielding techniques be used in the design of the tube mount.

RESOLVING POWER - The resolution of the storage tube at the 50% modulation level is usually in excess of 1200 lines across the diameter and is obtainable when the minimum current for writing a fully modulated signal is employed and the focus coil magnetic shell is designed to minimize astigmatism. Resolution is also dependent on the orientation of the focus coil with respect to the gun, and the sharpness of focus across the storage screen. Therefore, for applications requiring optimum resolution, dynamic focusing is often needed.

STORAGE ABILITY - The length of time a tube will retain the stored information is a function of the operating conditions and varies inversely as the reading current. When reading with a low beam current of about 0.2 uA at a television repetition rate and scan, several thousand consecutive readings can be made without any appreciable deterioration of the stored signal. The tube is capable of storing information for many hours withour appreciable change or deterioration when not reading.

FOCUSING TECHNIQUE - This tube can be focused electrostatically, magnetically or using a combination of fixed focus by one technique and dynamic focus correction by the second. Magnetic dc focusing provides higher resolution than does electrostatic but frequently requires more power. When magnetic focusing is being used, the focus electrode is set at anode potential; when electrostatic focusing is being used, the focus electrode is typically set at 400 Vdc when the anode is set at 3500 Vdc. The recommended technique for dynamic focusing is to apply 1000 to 1500 Vdc to the focus electrode, then adjust the magnetic focus for optimum resolution near the center of the storage target, and finally apply the base clamped parabolic correction waveform to the focus electrode such that the edges of the target are brought into focus. Approximately 350 Vac peak to peak correction is necessary to maintain focus as the beam is scanned across the diameter of the target at the above focus electrode voltage.

RECORDING STORAGE TUBE

TYPICAL SCHEMATIC

Radar PPI to TV Scan Conversion, Simultaneous Write and Read with automatic prime (erasure) and RF separation.

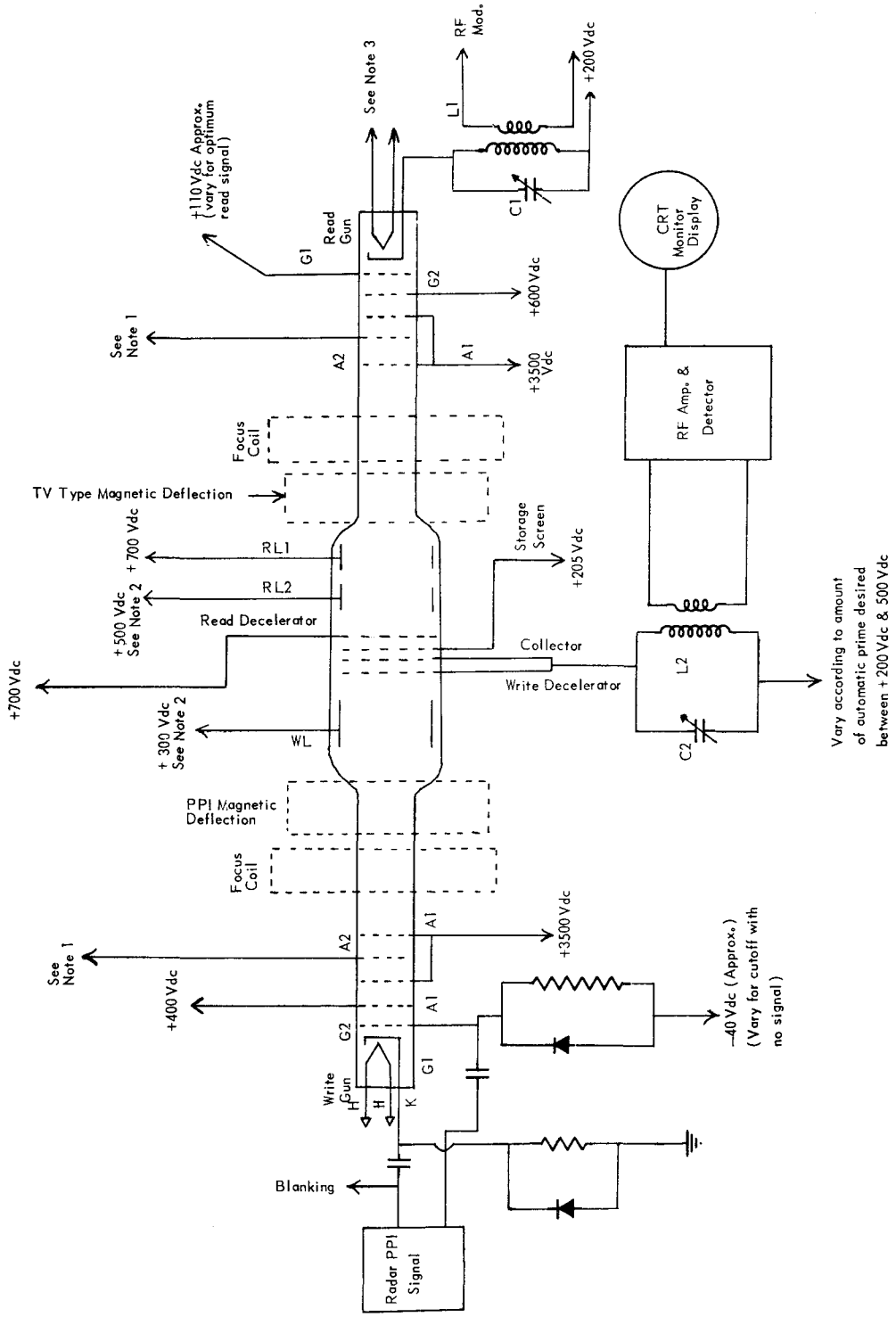

NOTES FOR SCHEMATIC OUTLINE

Note 1: If electrostatic focus only is used A2 voltage should be adjusted for optimum focus, approximately +400 Vdc. If magnetic focus is used A2 should be approximately +3500 volts. Best resolution can be obtained by dynamic focusing. This can be obtained by either of the following methods:

Since the storage tube anode voltage is considerably lower than most magnetically focused cathode ray tubes, a non-astigmatic focus coil is recommended where high resolution is desired. Resolution near the edges of the storage area can be further improved by use of dynamic focusing. (A focus coil providing both these features is being manufactured by Raytheon for use with the CK7702. It is designated as coil #BM411).

Since the dynamic focus correction is a function of the displacement of the electron beam from the axis of the tube at any instant, it can be generated from an output equivalent to the algebraic sum of two parabolas generated from the horizontal and vertical sweeps respectively.

It is suggested that the dc focus be provided from a constant current source to minimize focus drift caused by the change in resistance of the focus coil during warmup.

Dynamic focus correction can also be obtained with a combination of magnetic and electrostatic focus. A parabolic wave shape is superimposed on the electrostatic focus element A2. The DC value of A2 under this condition will be approximately +1200 volts.

Note 2: Vary for most uniform background of stored video information.

Note 3: The maximum heater cathode voltage rating should be adhered to. An isolated heater supply should be used for the read gun.

Note 4: L1 C1 is provided to permit RF modulation of the read current. The frequency of the RF used is typically 30 or 60 megacycles. L2 C2 is a tuned circuit to permit reading of the RF signal output. Its band pass should be sufficient to pass all video frequencies desired. C2 is a combination of the collector and accelerator capacitance to all other elements and an adjustable capacitor.

RAYTHEON

RECORDING STORAGE TUBE

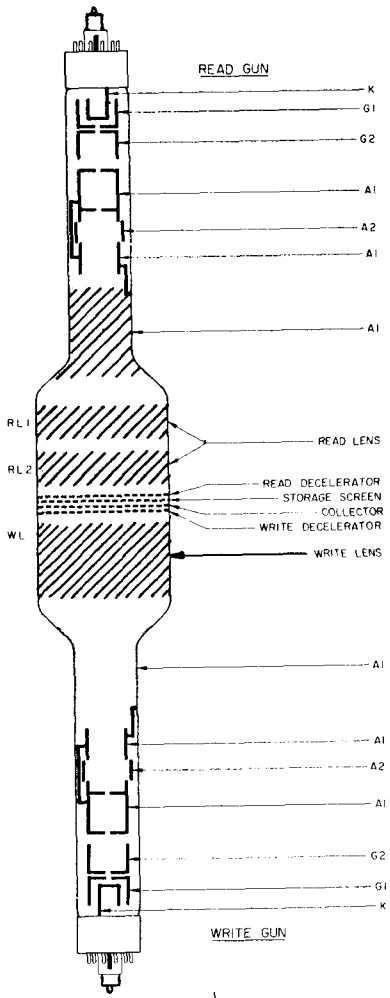

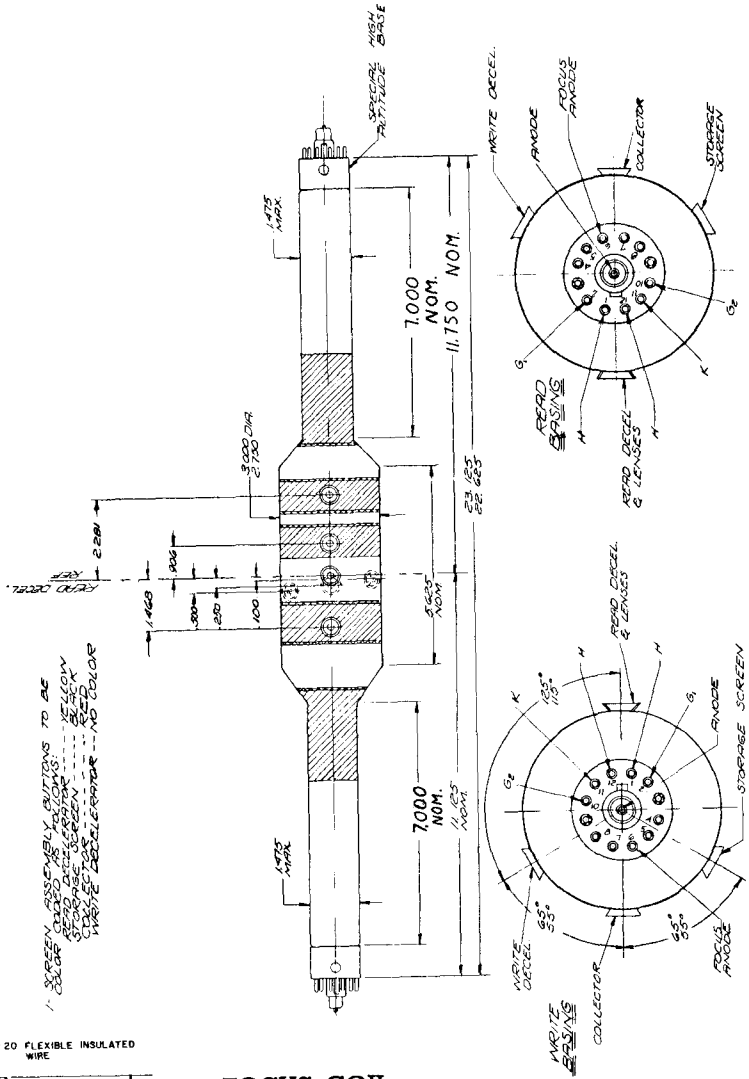

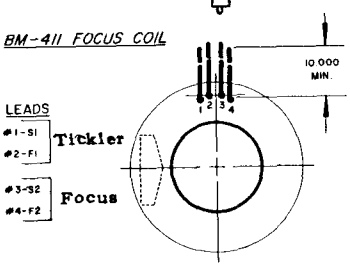

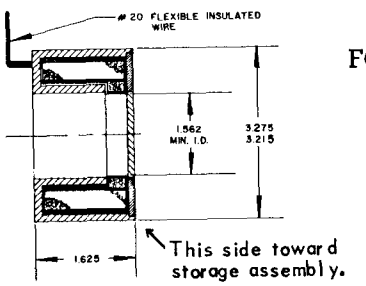

FOCUS COIL

Resistance — 6500 to 9000 ohms (at 20°C)
Max. Current — 25 madc
Voltage Rating — 250 V

TICKLER COIL

Resistance-105 to 145 ohms (at 20°C)
Max. Current-30mA RMS
Voltage Rating-250V
Inductance-45 Millihenries Approx.

Notes:

1) For use with recording storage tubes and simulators.
2) Tickler coil is provided to permit compensating for improper focus at the edges of a pattern caused by the variation in distance from the center of deflection to a) the center of a storage area of a storage tube, b) the periphery of the storage area.
3) When not required, the tickler coil may be left unconnected.
4) Shell material — annealed swedish iron or equivalent.