TECHNICAL DATA

7211 / 7698

PLANAR TRIODES

7211 7698

The EIMAC 7211 and 7698 are rugged ceramic/metal planar triodes designed for use in CW, grid- or plate-pulsed oscillator, amplifier or frequency multiplier service up to 3 GHz. The tubes may also be used in pulse modulator or voltage regulator service. The 7211 is normally supplied with an air cooled radiator for forced air cooling, while the 7698 is supplied without radiator and is intended for conduction-convection cooling as found in many pulsed type applications. Except for the plate dissipation ratings and outline, the characteristics of both tube types are identical.

The 7211 and 7698 feature high mu, high transconductance, great mechanical strength and low interelectrode capacitances, as well as high current capability and increased grid-anode insulator length. Both tubes have an arc-resistant, extended interface cathode, well proven in airline applications, assuring reliable and long life operation under adverse conditions.

Note: The data for the 7211 also applies to the EIMAC 7698R in all respects.

GENERAL CHARACTERISTICS[1]

ELECTRICAL

Cathode: Oxide Coated, Unipotential		
Heater: Voltage	6.3 ± 0.3	V
Current, at 6.3 volts	1.30	A
Transconductance (Average):		
I_b= 160 mAdc, (200mA/cm^2)	38	mmhos
Amplification Factor (Average)	80	
Direct Interelectrode Capacitance (grounded cathode)[2], without heater voltage:		
Grid-Cathode	8.0	pF
Grid-Plate	2.25	pF
Plate-Cathode (maximum)	0.06	pF
Cut-off Bias[3] (maximum)	-30	V

1. Characteristics and operating values are based upon performance tests. These figures may change without notice as the result of additional data or product refinement. EIMAC Division of Varian should be consulted before using this information for final equipment design.
2. Capacitance values are for a cold tube as measured in a special shielded fixture. When the cathode is heated to the proper temperature, the grid-cathode capacitance will increase from the cold value by approximately 1 pF due to thermal expansion of the cathode.
3. Measured with one milliampere plate current and a plate voltage of 1 kVdc.

(Effective 11-15-70) © 1970 by Varian Printed in U.S.A.

MECHANICAL

Maximum Overall Dimensions:	
Length	2.701 in; 68.60 mm
Diameter (7698)	1.195 in; 30.35 mm
Diameter (7211)	1.264 in; 32.11 mm
Net Weight (7698)	1.8 oz; 48 gm
Net Weight (7211)	2.2 oz; 63 gm
Operating Position	Any
Maximum Operating Temperature:	
Ceramic/Metal Seals	250°C
Anode Core	250°C
Cooling (7698)	Conduction and Convection
Cooling (7211)	Forced Air
Terminals	Coaxial, special

ENVIRONMENTAL

Shock, 11 ms, non-operating	60 G
Vibration, operating, all axes 55 to 500 Hz	10 G
Altitude, max (in a suitably designed circuit)	70,000 ft.

CW RF POWER AMPLIFIER OR OSCILLATOR

ABSOLUTE MAXIMUM RATINGS

DC PLATE VOLTAGE	2500	VOLTS
DC GRID VOLTAGE	-150	VOLTS
INSTANTANEOUS PEAK GRID-CATHODE VOLTAGE		
Grid negative to cathode	-400	VOLTS
Grid positive to cathode	30	VOLTS
DC PLATE CURRENT	150	MILLIAMPERES
DC GRID CURRENT	45	MILLIAMPERES
AVERAGE PLATE DISSIPATION		
Conduction and Convection (7698)	10	WATTS
Forced Air Cooling[1] (7211)	100	WATTS
GRID DISSIPATION (Average)	2	WATTS
FREQUENCY	2.5	GHz

1. Using EIMAC radiator PN 014224.

OPERATING CONDITIONS FOR 7211 AND 7698 IN REPRESENTATIVE APPLICATION

Grounded Grid CW Power Amplifier

Frequency	700	MHz
Heater Voltage	6.3	V
DC Plate Voltage	630	Vdc
DC Grid Voltage (approx)	-5	Vdc
DC Cathode Current	140	mAdc
DC Grid Current	25	mAdc
Drive Power (approx)	4	W
Useful CW Power Output	45	W

Grounded Grid CW Oscillator

Frequency	2.5	GHz
Heater Voltage	5.0	V
DC Plate Voltage	1000	Vdc
DC Grid Voltage (approx)	-20	Vdc
DC Plate Current	140	mAdc
DC Grid Current	30	mAdc
Useful CW Power Output	30	W

GRID PULSED OR PLATE PULSED AMPLIFIER OR OSCILLATOR

ABSOLUTE MAXIMUM RATINGS

DC PLATE VOLTAGE (GRID PULSED)	2500	VOLTS
PEAK PULSE PLATE VOLTAGE (PLATE PULSED)	3500	VOLTS
DC GRID VOLTAGE	-150	VOLTS
INSTANTANEOUS PEAK GRID-CATHODE VOLTAGE		
Grid negative to cathode	-700	VOLTS
Grid positive to cathode	250	VOLTS
PULSE PLATE CURRENT	5.0	AMPERES
PULSE GRID CURRENT	2.5	AMPERES
AVERAGE PLATE DISSIPATION		
Conduction and Convection (7698)	10	WATTS
Forced Air Cooling[1] (7211)	100	WATTS
GRID DISSIPATION (Average)	2	WATTS
FREQUENCY	3.0	GHz
PULSE DURATION[2]	6	μs
DUTY FACTOR[2]	.0033	

OPERATING CONDITIONS FOR 7211 AND 7698 IN REPRESENTATIVE APPLICATION

Grid Pulsed Amplifier

Frequency	1.1	GHz
Heater Voltage	6.3	V
DC Plate Voltage	2200	Vdc
DC Grid Voltage	-50	Vdc
Peak Video Plate Current	2.5	a
Peak Video Grid Current	1.0	a
Pulse Drive Power (approx)	400	w
Useful Power Output (approx)	2500	w
Pulse Duration	3	μs
Duty Factor	.002	

Plate Pulsed Oscillator

Frequency	3.0	GHz
Heater Voltage	5.8	V
Peak Plate Voltage	3500	v
Peak Video Plate Current	4.8	a
Peak Video Grid Current	1.5	a
Useful Power Output (approx)	3000	w
Pulse Duration	3	μs
Duty Factor	.0025	

1. Using Eimac radiator PN 014224.
2. For application requiring longer pulse duration and/or higher duty cycle consult the nearest Varian Electron Tube & Devices Field Office, or the Product Manager, EIMAC Division of Varian, Salt Lake City, Utah.

PULSE MODULATOR OR PULSE AMPLIFIER SERVICE

ABSOLUTE MAXIMUM RATINGS

DC PLATE VOLTAGE	2500	VOLTS
PEAK PLATE VOLTAGE	3500	VOLTS
DC GRID VOLTAGE	-150	VOLTS
INSTANTANEOUS PEAK GRID-CATHODE VOLTAGE		
Grid negative to cathode	-700	VOLTS
Grid positive to cathode	150	VOLTS
PULSE CATHODE CURRENT	7.5	AMPERES
DC PLATE CURRENT	150	MILLIAMPERES
AVERAGE PLATE DISSIPATION		
Conduction and Convection (7698)	.10	WATTS
Forced Air Cooling[1] (7211)	100	WATTS
GRID DISSIPATION (Average)	2	WATTS
PULSE DURATION[2]	6	μs
DUTY FACTOR[2]	.0033	
CUT-OFF MU	60	

1. Using EIMAC radiator PN 014224.
2. For application requiring long pulse duration and/or higher dury cycle consult the nearest Varian Electron Tube & Devices Field Office, or the Product Manager, EIMAC Division of Varian, Salt Lake City, Utah.

RANGE VALUES FOR EQUIPMENT DESIGN

	Min.	Max.	
Heater: Current at 6.3 volts	1.20	1.40	A
Cathode Heating Time	60	---	sec.
Interelectrode Capacitances[1] (grounded cathode connection)			
Grid-Cathode	7.0	9.0	pF
Plate-Cathode	---	0.06	pF
Grid-Plate	2.10	2.40	pF

1. Capacitance values for a cold tube as measured in a special shielded fixture. When the cathode is heated to the proper temperature, the grid-cathode capacitance will increase from the cold value by approximately 1 pF due to thermal expansion of the cathode.

APPLICATION

For general application information please refer to the Planar Triode Operating Instruction Sheet. The operating instructions should be consulted prior to the designing of new requirements around the above tube types. Plate dissipation of up to 150 watts is possible with the 7211/7698 tube type when using radiator P/N 158555. If this is required the tube order should include a reference to the different radiator part number. For unusual and special application consult the nearest Varian Electron Tube and Device Field Office, or the Product Manager, EIMAC Division of Varian, Salt Lake, City, Utah.

AIRFLOW vs STATIC PRESSURE WITH STANDARD COWLING JAN-157

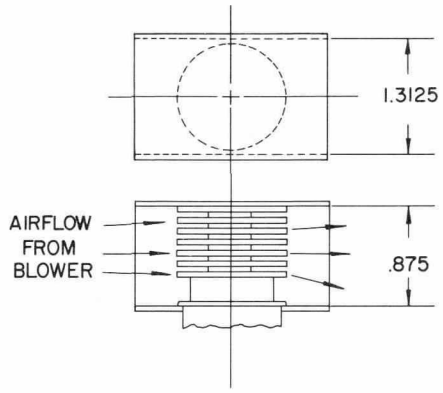

-STANDARD COWLING-

MAXIMUM PLATE DISSIPATION vs COOLING AIRFLOW

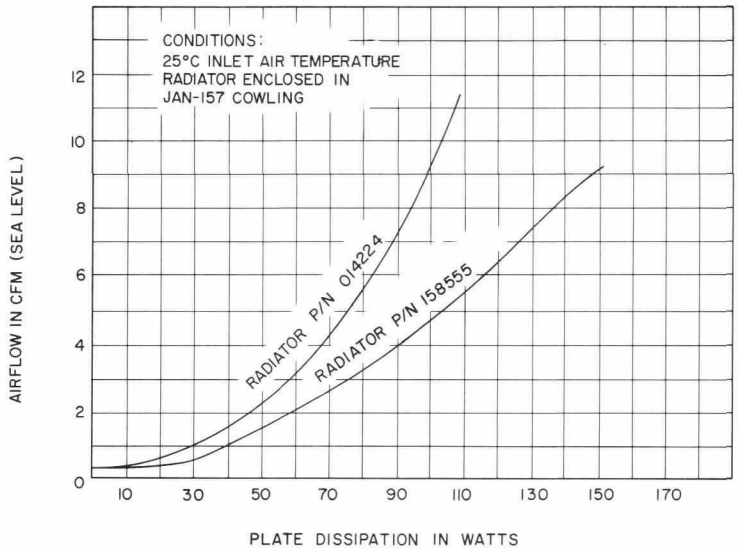

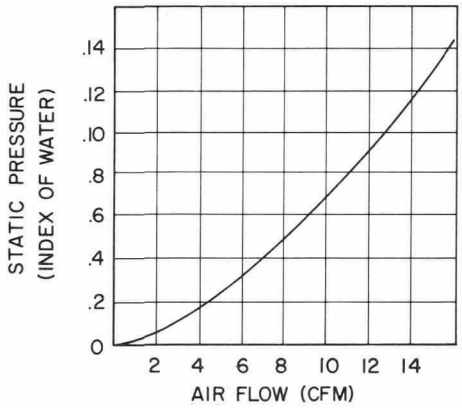

COMBINED CORRECTION FACTORS FOR INLET AIR TEMPERATURE AND ALTITUDE

(RELATIVE TO 25°C AND SEA LEVEL)

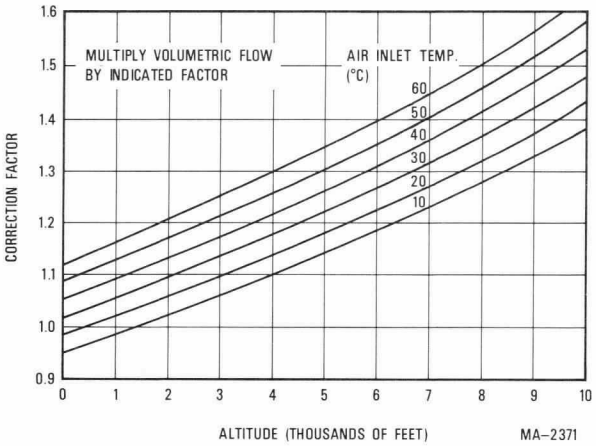

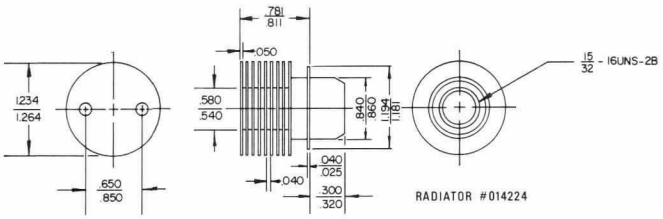

RADIATOR #014224

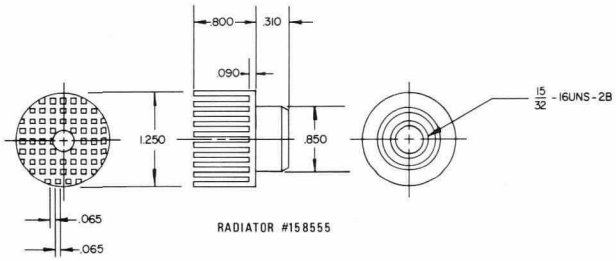

RADIATOR #158555

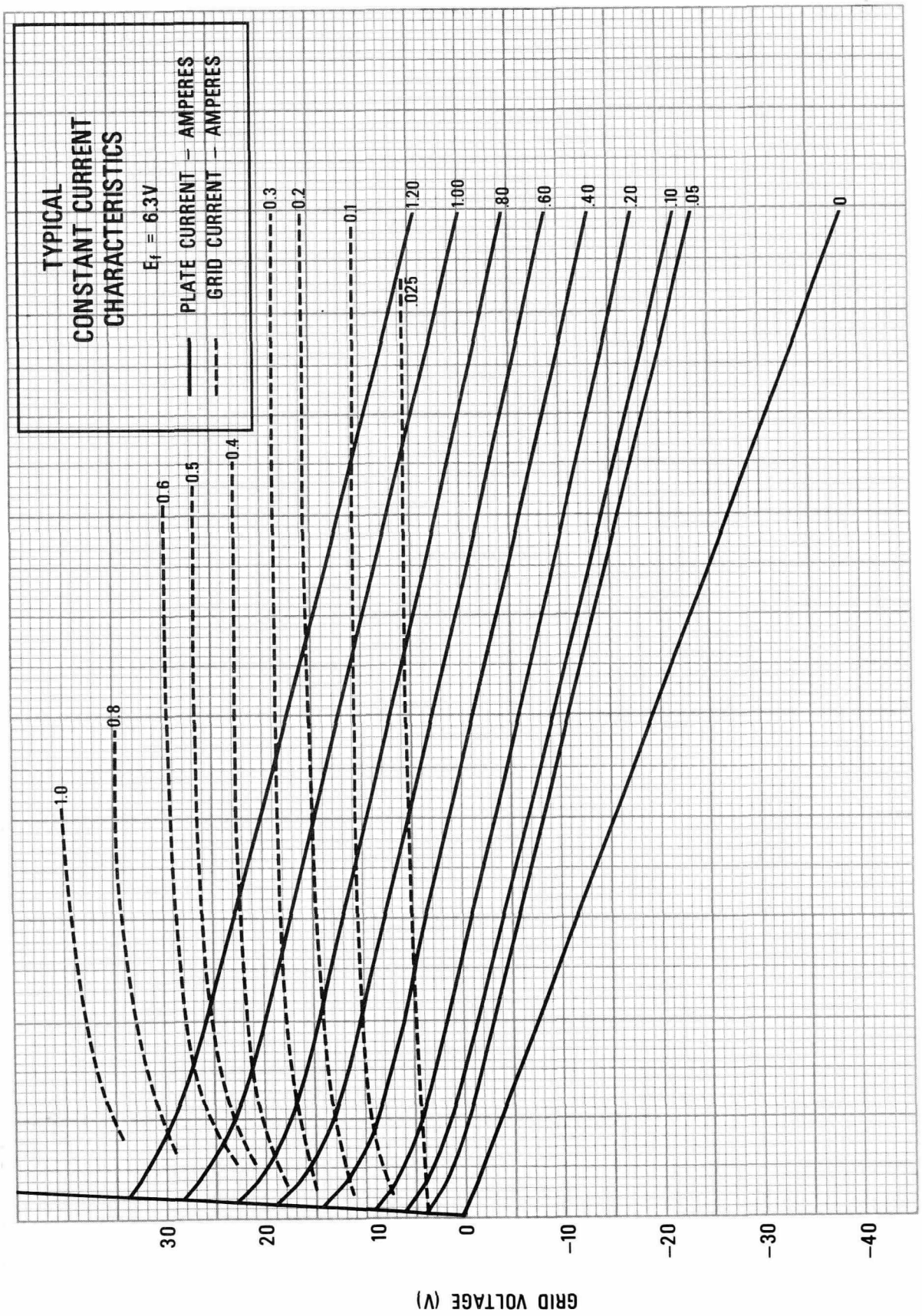

CURVE #MA-2380

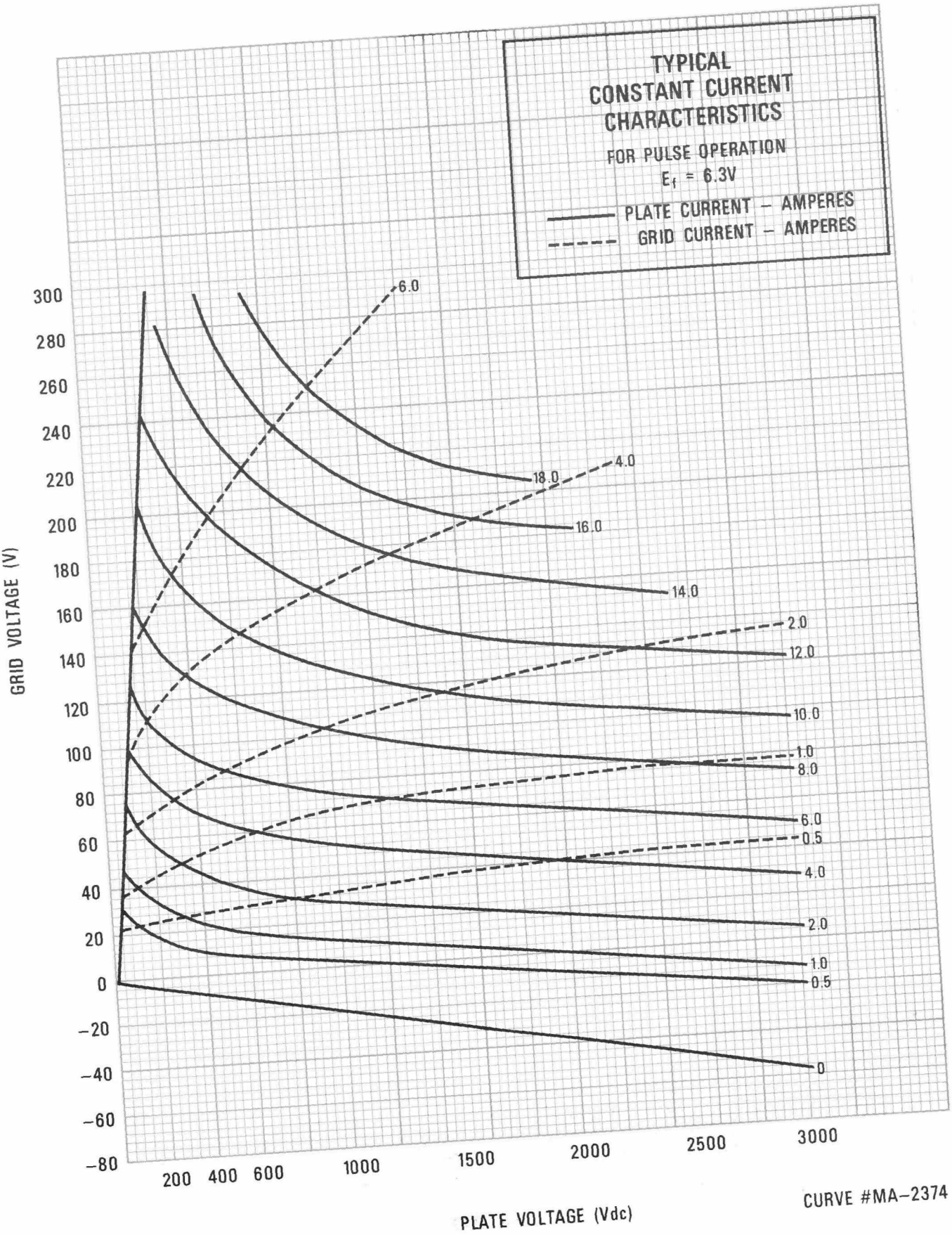

CURVE #MA–2374

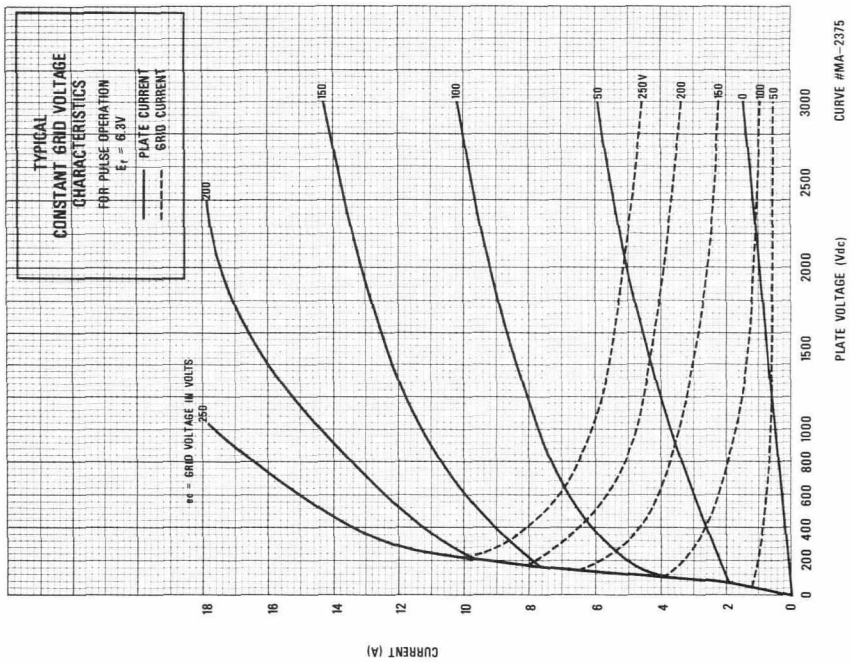
TYPICAL
CONSTANT GRID VOLTAGE
CHARACTERISTICS
FOR PULSE OPERATION
Ef = 6.3V
PLATE CURRENT
GRID CURRENT
ec = GRID VOLTAGE IN VOLTS
250
200
150
100
50
250V
200
150
0
100
50
CURRENT (A)
PLATE VOLTAGE (Vdc)
CURVE #MA-2375

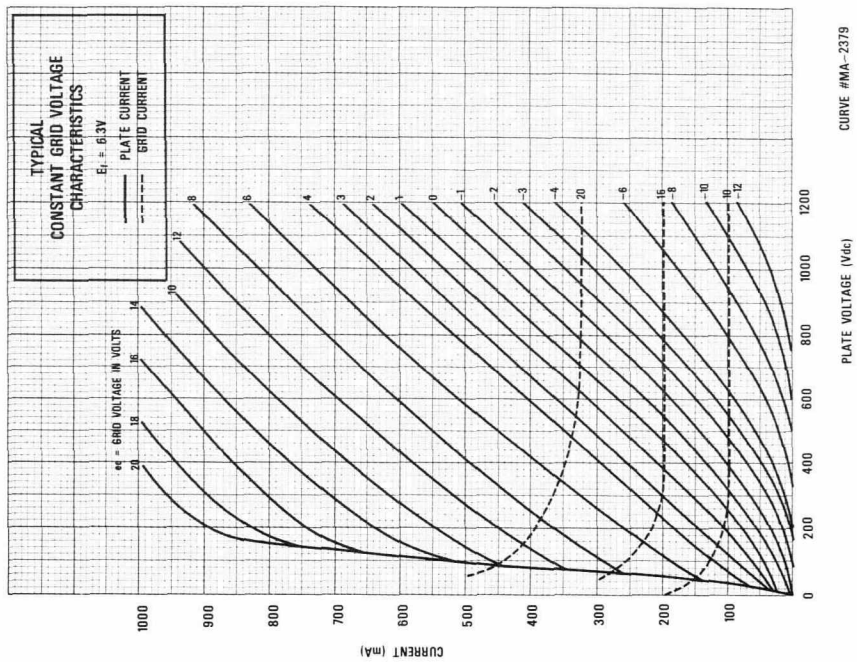
TYPICAL
CONSTANT GRID VOLTAGE
CHARACTERISTICS
Ef = 6.3V
PLATE CURRENT
GRID CURRENT
ec = GRID VOLTAGE IN VOLTS
20
18
16
14
12
10
8
6
4
3
2
1
0
-1
-2
-3
-4
-20
-6
-16
-8
-10
-10
-12
CURRENT (mA)
PLATE VOLTAGE (Vdc)
CURVE #MA-2379

ELECTRODE CONTACT AREA				
DIM	MIN.	MAX.	MIN.	MAX.
AA	.035	.361	.89	9.17
AB	1.185	1.265	30.10	32.14
AC	1.534	1.728	38.96	43.89
AD	1.475	1.815	37.47	46.10
	DIM. IN INCHES		DIM. IN MILLIMETERS	

DIMENSION DATA					
DIM. IN INCHES			DIM. IN MILLIMETERS		
MIN.	MAX.	DIM	MIN.	MAX.	NOTES
1.185	1.875	A	46.10	47.62	
	1.534	B		38.96	
	1.475	C		37.46	
1.289	1.329	D	32.74	33.76	
.970	1.010	F	24.64	25.65	
.462	.477	G	11.73	12.12	
	.040	H		1.02	
	.185	I		4.70	
.766	.826	J	19.46	20.98	
1.180	1.195	M	29.97	30.35	
1.025	1.035	N	26.04	26.29	e
.752	.792	P	19.10	20.12	d
.655	.665	R	16.64	16.89	c
	.545	S		13.84	
.213	.223	T	5.41	5.66	e
.315	.325	U	8.00	8.26	e
	.086	V		2.18	
	.100	W		2.54	
.840	.860	LA	21.34	21.84	
.427	.447	ZA	10.75	11.35	

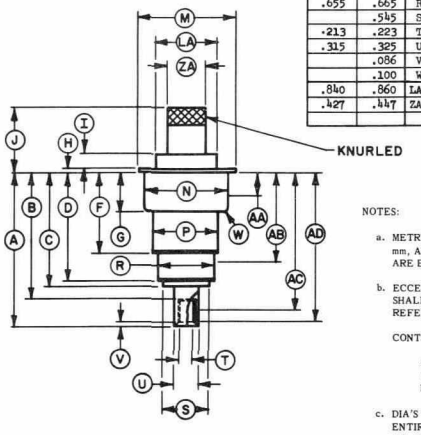

NOTES:

a. METRIC EQUIVALENTS, TO THE NEAREST .01 mm, ARE FOR GENERAL INFORMATION ONLY & ARE BASED UPON 1 inch = 25.4 mm.

b. ECCENTRICITY OF CONTACT SURFACES SHALL BE GAGED FROM CENTER LINE OR REFERENCE & SHALL BE AS FOLLOWS:

CONTACT SURFACE	TIR(MAX)	REFERENCE
ANODE	.020	CATHODE
GRID	.020	CATHODE
HEATER	.012	CATHODE

c. DIA'S N, R, T, & U SHALL APPLY THROUGHOUT ENTIRE LENGTH AS DEFINED BY DIM'S AA, AB, AC & AD RESPECTIVELY.

d. THIS SURFACE SHALL NOT BE USED FOR CLAMPING OR LOCATING.

7698

ELECTRODE CONTACT DIMENSION				
DIM	MIN.	MAX.	MIN.	MAX.
AA	.035	.361	.89	9.17
AB	1.185	1.265	30.10	32.14
AC	1.534	1.728	38.96	43.89
AD	1.475	1.815	37.47	46.10
	DIM. IN INCHES		DIM. IN MILLIMETERS	

DIMENSION DATA					
DIM. IN INCHES			DIM. IN MILLIMETERS		
MIN.	MAX.	DIM	MIN.	MAX.	NOTES
1.185	1.875	A	46.10	47.62	
	1.534	B		38.96	
	1.475	C		37.46	
1.289	1.329	D	32.74	33.76	
.970	1.010	F	24.64	25.65	
.462	.477	G	11.73	12.12	
	.040	H		1.02	
.125	.185	I	3.18	4.70	
.766	.826	J	19.46	20.98	
.025	.046	K	.64	1.17	
1.234	1.264	L	31.34	32.11	
1.180	1.195	M	29.97	30.35	
1.025	1.035	N	26.04	26.29	e
.752	.792	P	19.10	20.12	
.655	.665	R	16.64	16.89	
	.545	S		13.84	
.213	.223	T	5.41	5.66	e
.315	.325	U	8.00	8.26	e
	.086	V		2.18	
	.100	W		2.54	
.105	.145	Y	2.67	3.68	c
.650	.850	Z	16.51	21.59	

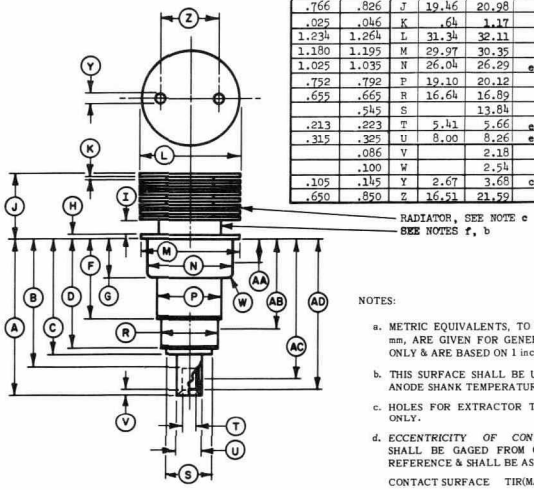

NOTES:

a. METRIC EQUIVALENTS, TO THE NEAREST .01 mm, ARE GIVEN FOR GENERAL INFORMATION ONLY & ARE BASED ON 1 inch = 25.4 mm.

b. THIS SURFACE SHALL BE USED TO MEASURE ANODE SHANK TEMPERATURE.

c. HOLES FOR EXTRACTOR THROUGH TOP FIN ONLY.

d. ECCENTRICITY OF CONTACT SURFACES SHALL BE GAGED FROM CENTER LINE OF REFERENCE & SHALL BE AS FOLLOWS:

CONTACT SURFACE	TIR(MAX)	REFERENCE
ANODE	.020	CATHODE
GRID	.020	CATHODE
HEATER	.012	CATHODE

e. DIA'S N, R, T & U SHALL APPLY THROUGHOUT ENTIRE LENGTH AS DEFINED BY DIM'S AA, AB, AC & AD RESPECTIVELY.

f. THIS SURFACE SHALL NOT BE USED FOR CLAMPING OR LOCATING.

7211