GL-7680

PACKAGED VOLTAGE-TUNABLE MAGNETRON

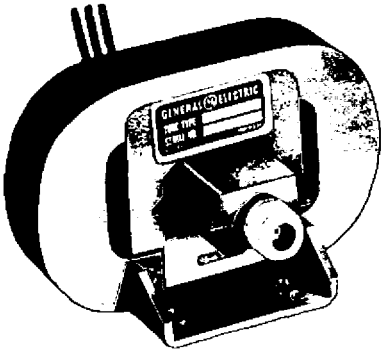

1000–2300 MEGACYCLES **1 WATT CW OUTPUT**

The GL-7680 is a packaged voltage-tunable magnetron for voltage-tunable operation in the 1000-to-2300-megacycle frequency range. It is a complete r-f power source package requiring only input power connections and an r-f power output connection and has a minimum CW power output of one watt across the entire frequency range. The tube may be voltage-tuned over a portion or all of the frequency range for which it is designed or operated at a fixed frequency. The voltage-frequency relationship is essentially linear.

Electrical

	Minimum	Bogey	Maximum	
Cathode—Directly Heated				
Filament Voltage*	2.3	2.6	2.8	Volts
Filament Current	—	3.0	—	Amperes

Mechanical

Mounting Position—Any
Net Weight ..... 3.5 Pounds

Thermal

Type of Cooling—Forced Air
Air Flow ..... 5 Cubic Feet Per Minute
Ambient Air Temperature, Maximum ..... 50 C

MAXIMUM RATINGS—ABSOLUTE VALUES

Anode Voltage ..... 2000 Volts
Anode Current ..... 20 Milliamperes
Power Input, with forced-air cooling. 45 Watts
Injection Electrode Voltage ..... 500 Volts
Injection Electrode Current ..... 1.0 Milliamperes
Filament Current ..... 3.2 Amperes
Voltage Standing Wave Ratio 1.5

TYPICAL OPERATION

Operation with 60-cycle Sweep Voltage in Wide-Band Circuit
Filament Voltage*, approximate .. 2.60 Volts
Filament Current ..... 3.0 Amperes
Tunable Range† ..... 1000-2300 Megacycles
Tuning Sensitivity, approximate ... 1.2 Megacycles per Volt
Anode Voltage at 1.6 Kilomegacycles ..... 1400 Volts
Anode Current, average ..... 5 to 15 Milliamperes
Injection Electrode Voltage, positive with respect to cathode .. 200 to 400 Volts
Injection Electrode Current ..... 0.1 Milliamperes
Voltage Standing Wave Ratio of Load 1.3
Power Output, minimum ..... 1.0 Watts
Variation over Band .. Less than 4:1

* Filament current should be adjusted to 3.0 amperes.
† Frequency controlled by anode voltage.

CAUTION: A clearance of nine inches between ferromagnetic materials and the tube will prevent any serious change of the operating characteristics.

GENERAL ELECTRIC

from JEDEC release #4054, Dec. 31, 1962

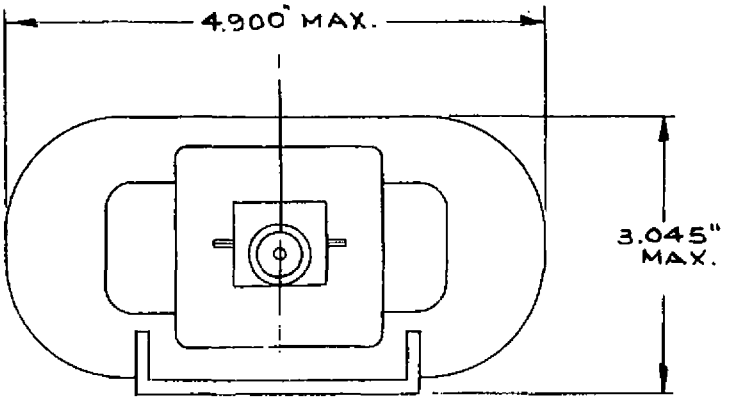

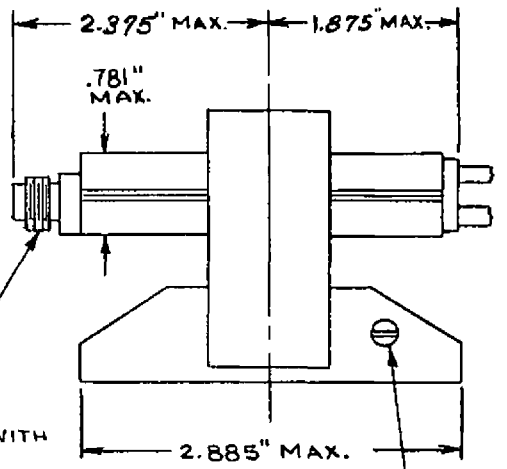

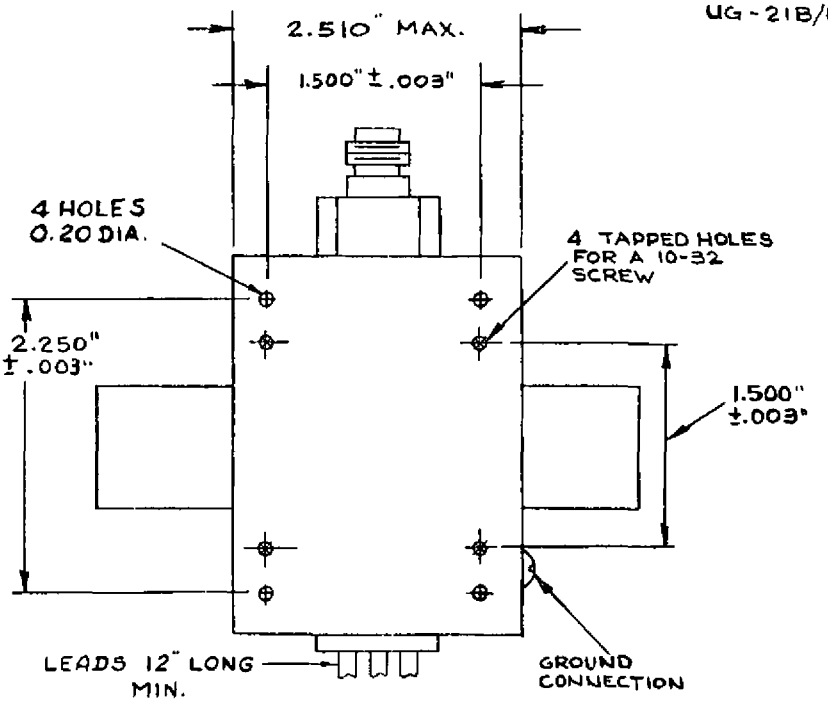

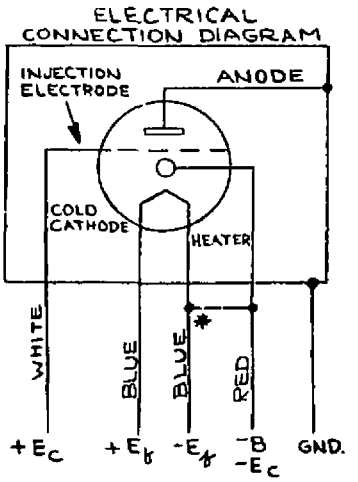

K69087-72A903

12-62

*Note: An external connection is required between the cold cathode lead and one of the heater leads.

GENERAL ELECTRIC

POWER TUBE DEPARTMENT

Schenectady 5, N. Y.