TUNG-SOL

PRODUCT BULLETIN

INDUSTRIAL ELECTRON TUBE TYPE 7605

JULY 1963

CROWBAR THYRATRON

DESCRIPTION–The 7605 is a zero bias hydrogen thyratron designed to pass high currents in "crowbar" protective circuits. As described in the application notes, destructive arc currents are short circuited by the crowbar tube before damage occurs to other tubes or circuit elements.

The instantaneous response, and ability to repeatedly carry extremely large currents, makes the hydrogen thyratron particularly attractive for this application. One type 7605 can handle a peak current of 3000 Amperes at 30 Kilovolts. This tube utilizes a hydrogen reservoir which promotes long life and permits optimum gas pressure adjustment for various conditions of operation.

This tube type was designed into some circuits under development type designation CH1097.

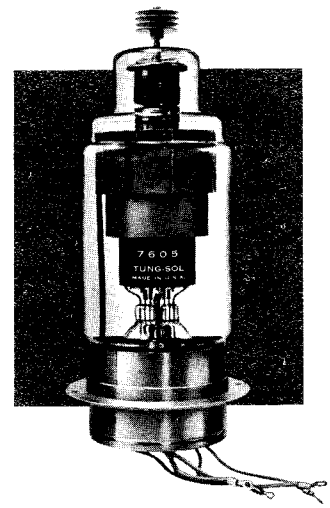

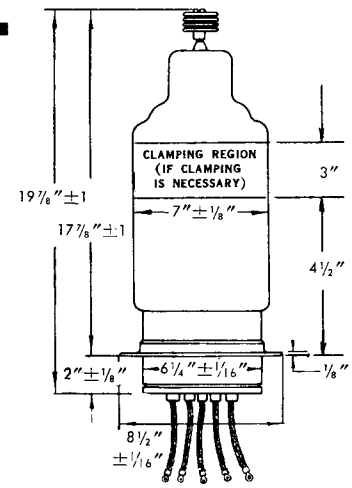

LEAD AND LUG DIMENSIONS ARE GIVEN WITH BASE CONNECTION INFORMATION ON PAGE 4

ELECTRICAL DATA

	Min	Bogey	Max	
Cathode Heater Voltage	6.0	6.3	6.6	Volts
Cathode Heater Current (at Ef = 6.3 volts)	20	23	40	Amperes
Cathode Heating Time	15	—	—	Minutes
Reservoir Voltage	3.5	Marked on base	6.0	Volts
Reservoir Current (Respectively)	3.5	—	12	Amperes
Reservoir Heating Time	15	—	—	Minutes

MECHANICAL DATA

Type of Cooling ..... Convection
Max Net Weight ..... 10 pounds
Mounting Position ..... Vertical, Base down
Dimensions: See outline drawings

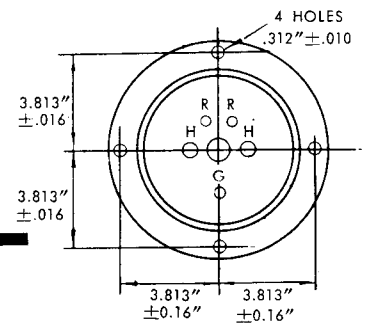

MAXIMUM RATINGS — ABSOLUTE VALUES

	Min	Max	
D-C Anode Voltage			
Forward	5	30	Kilovolts
Inverse	—	15	Kilovolts
Cathode Current			
Peak			
Filter discharge period			
0 to 1.5 Milliseconds	—	3000	Amperes
	—	or 1.2	Coulomb
Rectifier short circuit period			
1.5 to 100 Milliseconds	—	90	Amperes
1.5 to 50 Milliseconds	—	180	Amperes
1.5 to 30 Milliseconds	—	300	Amperes
Average	—	2.5	Amperes
Conduction Time per Fault	—	0.1	Second
Averaging Time	—	10	Seconds
D-C Grid Bias Supply Voltage	+100	+200	Volts
D-C Grid Bias Current	5	10	Milliamperes
Grid Trigger Pulse	1500	2000	Volts
Grid Trigger Pulse Rate of Rise	2000	—	Volts per microsecond
Grid Trigger Pulse Width — 1500 Volt Amplitude	0.8	—	Microsecond
Grid Impedance	10	25	Ohms
Anode Delay Time	—	0.6	Microsecond
Anode Voltage Drop	50	350	Volts
Ambient Temperature Range	−55	+75	Degrees Centigrade

APPLICATION NOTES

In a typical application, a crowbar thyratron is connected in series with a suitable impedance across the filter of the high voltage power supply for a high frequency triode amplifier. Whenever an arc occurs in the amplifier tube, the rising current is used to deliver a suitable signal to the grid of the thyratron. The thyratron immediately conducts to short circuit the power supply until the protective circuit breaker opens approximately 0.1 second later. To insure minimum anode delay time, positive bias is recommended.

TYPICAL CROWBAR APPLICATION

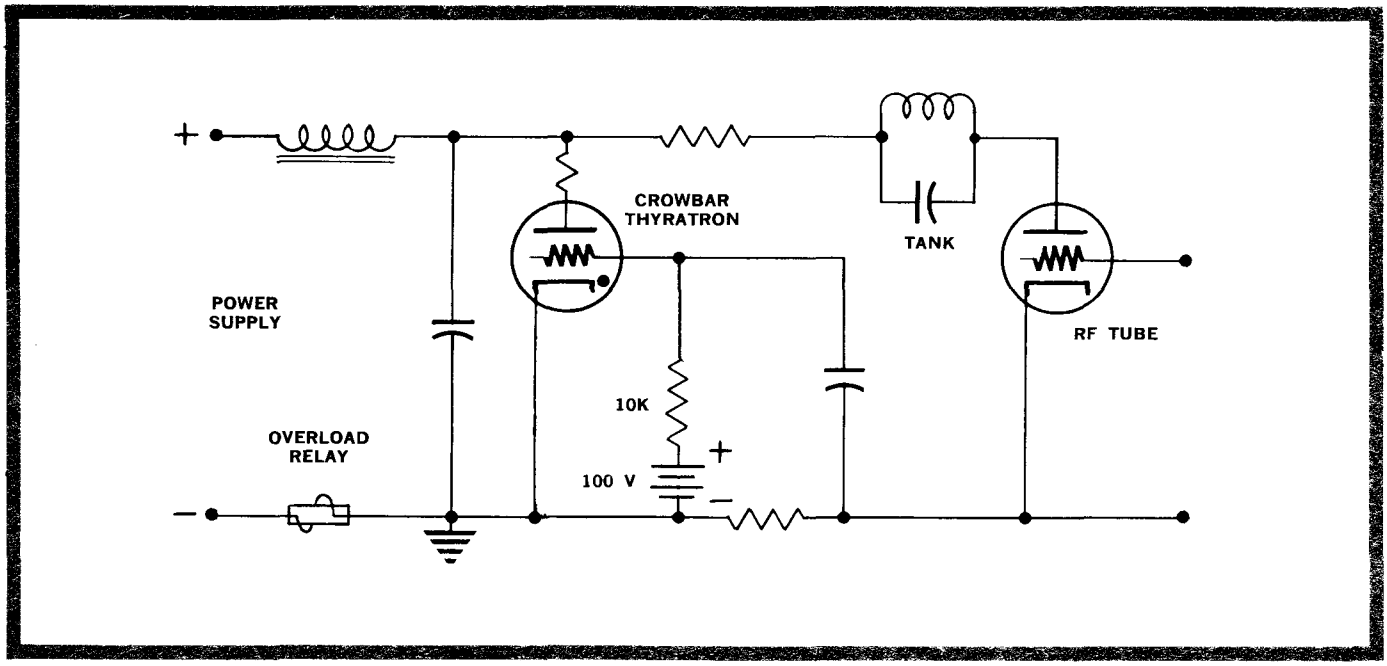

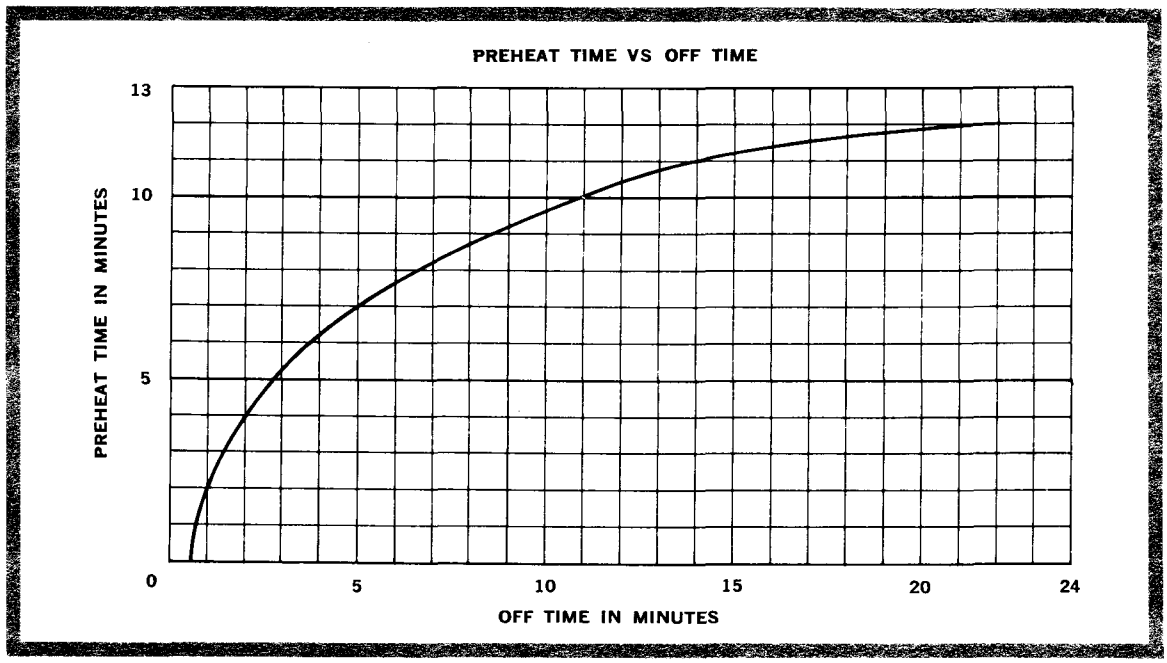

BASING CONNECTIONS

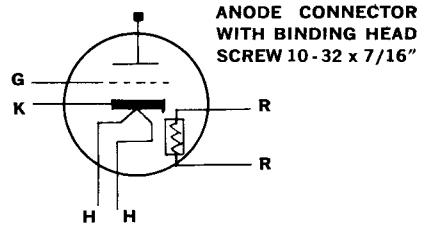

LEAD CONNECTIONS

Lead	Function	Lead Color	Lug Color	Lug
G	Grid	Green	Green	S
H	Heater	Yellow	Yellow	L
H	Heater	Yellow	Yellow	L
R	Reservoir	Red	Red	S
R	Reservoir	Red	Red	S
K	Cathode	Tube Base Flange		

Leads are flexible 8″ ±¾″ long from bottom of base to center of lug hole. Color coding as well as base marking identifies the leads.

LUG DIMENSIONS

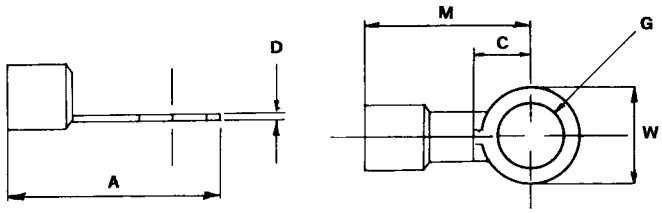

LUG	G STUD	A MAX	W MAX	C MIN	D	M MAX
L	¼″	1.21″	.53″	.41″	.04″	.94″
S	#10	.90″	.31″	.30″	.03″	.74″

References:

SMITH, BOB:
The Fault Diverter — A Protective Device for High-Power Electron Tubes. Report UCRL-3701 Rev. University of California, Radiation Laboratories, Berkeley, Calif.

PARKER, W. N.
and
HOOVER, M. V.:
Gas Tubes Protect High-Power Transmitters. Electronics, Jan. 1956.

DOOLITTLE, H. D.:
High Powered Hydrogen Thyratrons. Cathode Press, V1, P6, 1954.