MAGNETRON TYPE 7541

Hand Tunable with Lock	Forced Air Cooled	250 KW Peak
8500-9600 M.C.	Integral Magnet	Power Output

The 7541 is a tunable X-band magnetron. It is designed to serve as a pulse oscillator at frequencies between 8500 and 9600 megacycles per second. Its tuner design allows frequency to be set at any desired frequency and locked in place.

The 7541 has a typical power output of approximately 250 kilowatts over its entire frequency range. Pulse widths up to 1.1 microseconds may be used. Thermal drift is typically 10 megacycles, even at the extremes of the frequency range. The 7541 provides excellent spectrum shape and excellent stability of operation.

Structurally, the 7541 employs a double strapped, vane type anode. Tuning is accomplished by contacting plungers in four tuner cavities which are tightly coupled to the main resonator system. Tuning is therefore accomplished remote from the interaction space and in low field areas of the tube, greatly improving both electrical and thermal stability. An impregnated cathode is used which is arc resistant and has excellent life properties. Mechanical gearing is provided to "gang" the tuners and permit tuning from a single shaft. The 7541 has a waveguide type output which is designed to couple to a modified UG-52A/U choke flange. The output may be pressurized, although no breakdown will occur if pressure is maintained at 1 atmosphere.

The 7541 tuner is designed for hand tuning. A lock nut is provided which may be tightened after the desired frequency is reached. A calibrated dial provides an indication of tube frequency.

The 7541 is designed for transmitter service in airborne fire control systems and in missile seeker systems. The tube is useful in ground as well as airborne installations where a high performance X-band power source is required. While the tube is designed for a 0.001 duty cycle, higher duties may be used with reduced peak power output. The 7541 is designed to replace the fixed-tuned 4J50 series magnetrons.

MECHANICAL:

Mounting Position . . . . . Any
Dimensions . . . . . See Outline Drawing
Air Flow:
To Fins . . . . . An air stream should be directed along the cooling fins toward the body of the tube. Adequate flow should be provided so that the temperature of the anode block does not exceed 150°C.
Cathode Bushing . . . . . Oil Immersed or Pressurized ⊕
Waveguide Output Flange . . . Mates with modified JAN UG-52/U
Cathode Connector . . . . . The cathode connector should contain a built-in capacitor such as the Jettron No. 9000-C manufactured by Jettron Products, Hanover, New Jersey.
Tuner . . . . . Calibrated with Lock Nut
Tuning Torque:
Tube:
Room Temperature . . . . . 150 in. oz. Max.
Extreme Temperature (125°C to −55°C). . . . 200 in. oz. Max.
Equipment (applied to stops) . . . . . 200 in. oz. Max.
Tuner Backlash ■ . . . . . 20 Megacycles Max.
Lubrication † . . . . . .
Pressurization of Output . . . . . 15 psia (Min.) 45 psia (Max.)
Vibration § . . . . . .
Shock . . . . . 30 g's, 11 Milliseconds
Net Weight (Approx.) . . . . . 12 Pounds
Shipping Weight . . . . . 25 Pounds

ELECTRICAL:

Heater, for Unipotential Cathode:
Voltage (ac) . . . . . 13.75 Volts
Current at 13.75 Volts . . . . . Min.: 2.8 Max.: 3.5 Amperes
Starting Current . . . . . Maximum instantaneous starting current must never exceed 12 amperes.
Minimum Cathode Heating Time. . . . . 150 Seconds
Frequency . . . . . 8500-9600 Megacycles
Maximum Frequency Pulling at
VSWR of 1.5 . . . . . 15 Megacycles

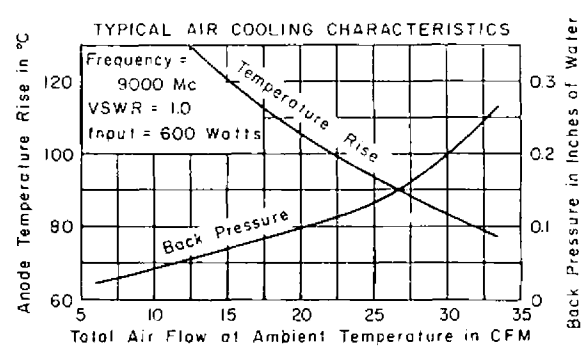

from JEDEC release #3416, Sept. 11, 1961

PULSED OSCILLATOR SERVICE

MAXIMUM AND MINIMUM RATINGS:	Min.	Max.	
Peak Anode Voltage	--	23	Kilovolts
Peak Anode Current	--	27.5	Amperes
Peak Power Input	--	630	Kilowatts
Duty	--	0.0011	--
Pulse Duration	--	1.1	Microseconds
Rate of Rise of Voltage Pulse	70	140	kv/μsecond
Anode Block Temperature	--	150	°C
Cathode Bushing Temperature	--	165	°C
Load Voltage Standing Wave Ratio	--	1.2	

TYPICAL OPERATION WITH LOAD
VOLTAGE STANDING WAVE RATIO
EQUAL TO OR LESS THAN 1.05 EXCEPT AS NOTED

OSCILLATION WITH DUTY CYCLE OF 0.001:		
Heater Voltage ●	0	Volts
Peak Anode Voltage	22	Kilovolts
Peak Anode Current	27.5	Amperes
Pulse Repetition Rate	1000	cps
Pulse Duration	1.0	μseconds
RF Bandwidth with worst phasing of 1.2 VSWR	1	Megacycle
Side Lobes	10	dB
Pulling Figure at VSWR of 1.5	12	Megacycles
Pushing Figure	0.2	Mc/amp
Peak Power Output	250	Kilowatts

NOTES

⊕ No breakdown will occur if pressure is maintained above 600 mm of Hg. Air flow must be sufficient to keep bushing below 165°C.

■ Backlash is defined as the difference in frequency when a given dial setting is approached in either direction of rotation.

† The 7541 is factory lubricated and should not require further lubrication. Care should be exercised to keep foreign particles out of the exposed portions of the turner mechanism. Should Further lubrication be desired, Dow Corning Silicone No. 33 Grease should be used on the gears.

● Heater voltage should be 0 volts for maximum life at 27.5 ma. and 0.001 duty. Higher voltages are permissible but may result in short life. Heater voltage for power input less than 450 watts = $13.75\left(1 \frac{\text{Power Input}}{450}\right)$.

§ *Special vibration problems encountered with the 7541 should be referred to the Microwave Engineering Dept. Westinghouse Electric Corporation, Elmira, New York.*

NOTES FOR OUTLINE DRAWING

1: Reference plane A is defined as the plane through that portion of the mounting flange designated as annular surface D. Reference plane B is defined as the plane which is perpendicular to plane A and passes thru the exact centers of mounting flange holes number 2 and number 3. Reference plane C is defined as the plane which is perpendicular to plane A and plane B and passes thru the exact center of mounting flange holes number 3 and number 4.

2: Surfaces D and E of the waveguide output flange and the mounting flange are made so that they may be used to provide a hermetic seal. This surface shall be flat within 0.015 TIR with a surface roughness of 32 per MIL-STD-10.

3: The axis of the heater-cathode terminal will be within the confines of a cylinder whose radius is 3/64 inch and whose axis is perpendicular to reference plane A at the specified location.

4: Allpoints on mounting flange other than specified in Note 1 must lie within 0.015 inch above or below reference plane A.

5: The limits include angular as well as lateral deviations.

6: These dimensions define extremities of the 0.169 inch internal diameter of the cylindrical heater-terminal.

7: These dimensions define extremities of the 0.540 inch internal diameter of the cylindrical heater-cathode terminal.

8: No part of the connector device for the heater and heater-cathode terminals should bear against the underside of this lip.

9: The heater terminal and the heater-cathode terminal are concentric within 0.010 inch.

10: Anode temperature shall be measured at junction of waveguide and anode back.

11: A 1-3/32" minimum long stud thru the mounting holes shall not interfere with any part of the tube.

The information contained herein is supplied without assuming responsibility for infringement of patents or other rights of third-parties which may result from its use. No license is granted by implication or otherwise under any patent or patent rights of Westinghouse Electric Corporation.

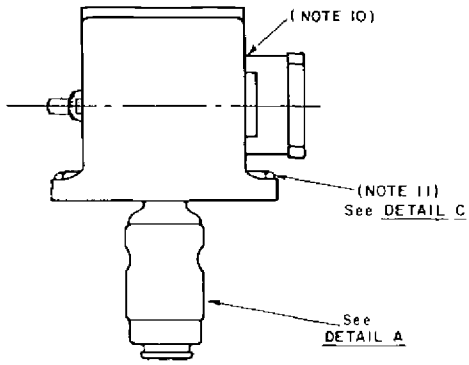

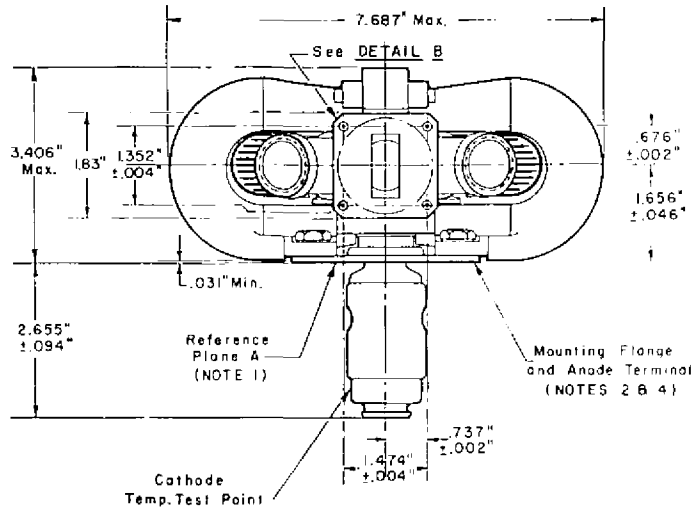

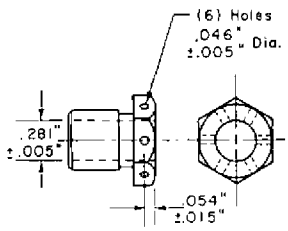

DETAIL C

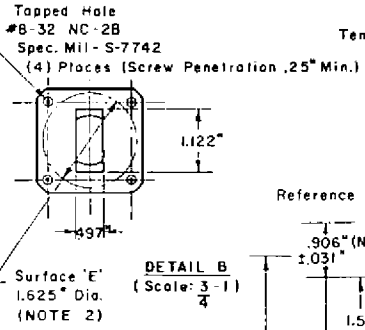

DETAIL B
(Scale: 3/4 - 1)

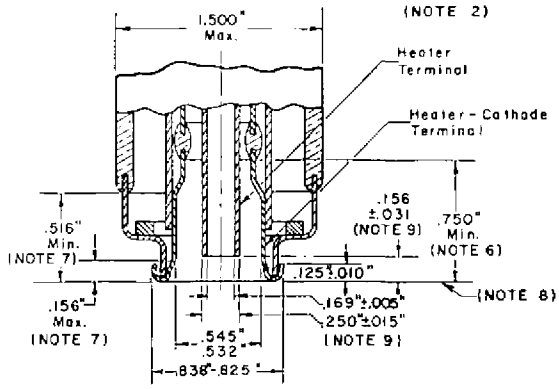

DETAIL A
(Scale: 2x1)

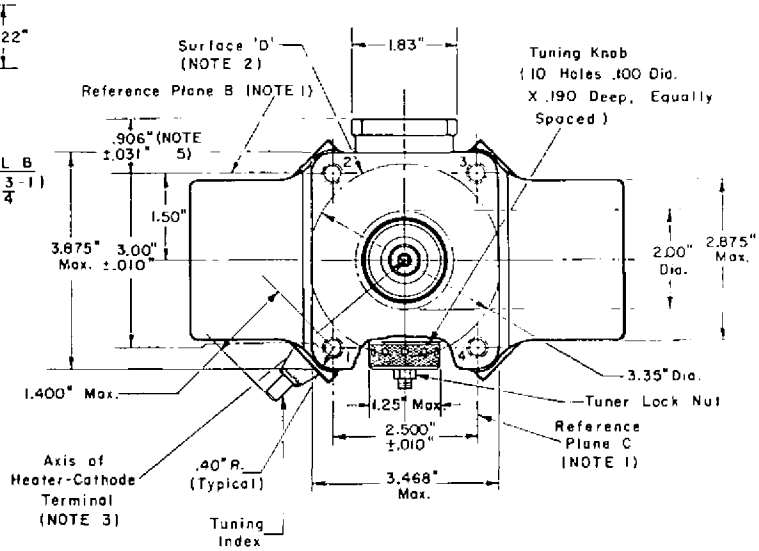

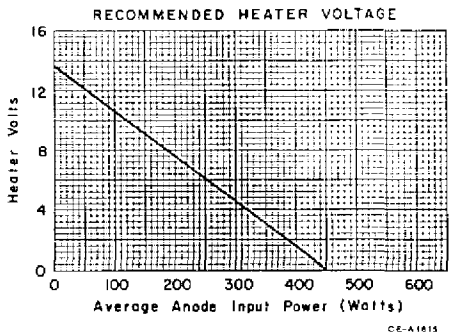

RECOMMENDED OPERATING REGION
IN
RG-51/U WAVEGUIDE

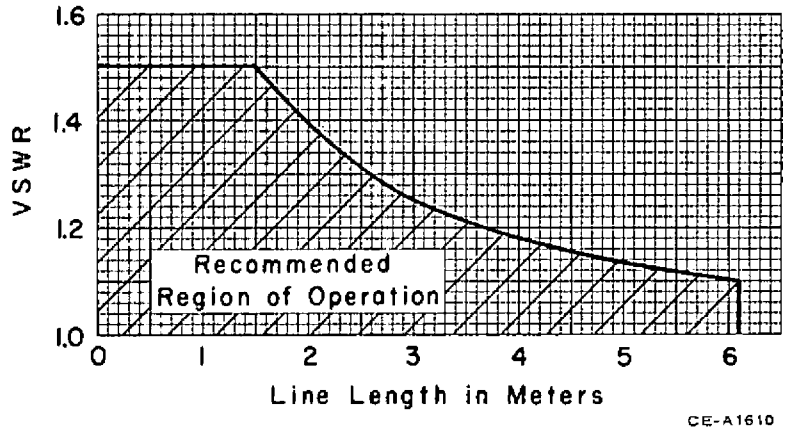

TYPICAL FREQUENCY DRIFT CHARACTERISTICS

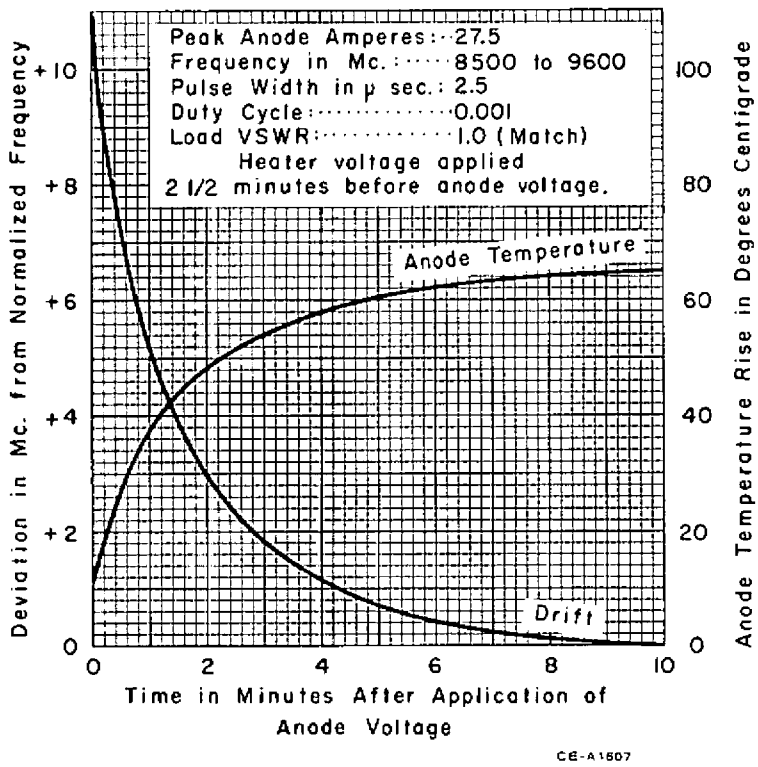

The information contained herein is supplied without assuming responsibility for infringement of patents or other rights of third parties which may result from its use. No license is granted by implication or otherwise under any patent or patent rights of Westinghouse Electric Corporation.