from JEDEC release #2647, Nov. 23, 1959

RK 7528 | PRELIMINARY

DATA SHEET

RAYTHEON *Excellence in Electronics*

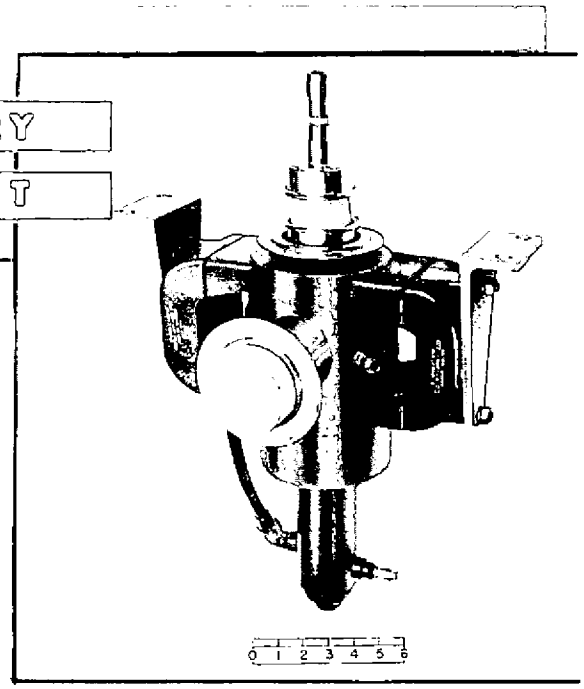

RK 7528

GENERAL DESCRIPTION

The RK7528/QK264 magnetron is a tuneable, high power, pulsed oscillator which is capable of delivering a minimum of 2.0 megawatts peak power and 2400 watts average power. The RK7528/QK264 is tuneable within the frequency region of 1250-1350 megacycles. The tube requires liquid cooling, is of the integral magnet type and the r.f. output is designed to couple directly to standard 3" x 6" waveguide.

The RK7528/QK264 magnetron may be used in MTI radar systems which require the generation of r.f. pulse energy that is relatively free from time, frequency, and amplitude jitter.

The generated power of this magnetron may be increased by 10-15% and satisfactory life still maintained by operating the tube into a 1.5 VSWR with the phase adjusted to the "in sink" position.

Mechanical Data

Mounting Position	Cathode Vertical
Net Weight	70 Pounds
Cooling	Liquid
Input Bushing	Oil Immersed
Output Pressurization	25 p.s.i.a. Min.

Typical Electrical Data

Heater Current - Preheat	90 Amperes
Heater Voltage @ 90 A - 600 Sec.	3.7 Volts
Current. Pulse Width (tpc)	4.3 usec
Duty Cycle	.0012
Peak Anode Voltage	60 Kilovolts
Voltage Rise Time	0.55-0.65 usec
Peak Anode Current	90 Amperes
Maximum VSWR	1.5
Average Power Output	2650 Watts
R.F. Bandwidth	2.1/tpc Max.
Life - 1.5 VSWR, Off-On Cycled	250 Hrs., 500 Hrs. Objective

Reliable operation and optimum magnetron life can be achieved only if the overall radar transmitter is designed with the magnetron characteristics and peculiarities clearly in mind. This preliminary data sheet is intended only to acquaint the reader with the basic characteristics of the magnetrons and should not be used as an absolute guide. Detailed test specifications are available upon request, and specific problems pertaining to applications should be directed to the Applications Engineering Department of the Raytheon Company, Microwave and Power Tube Division, Waltham, Massachusetts.

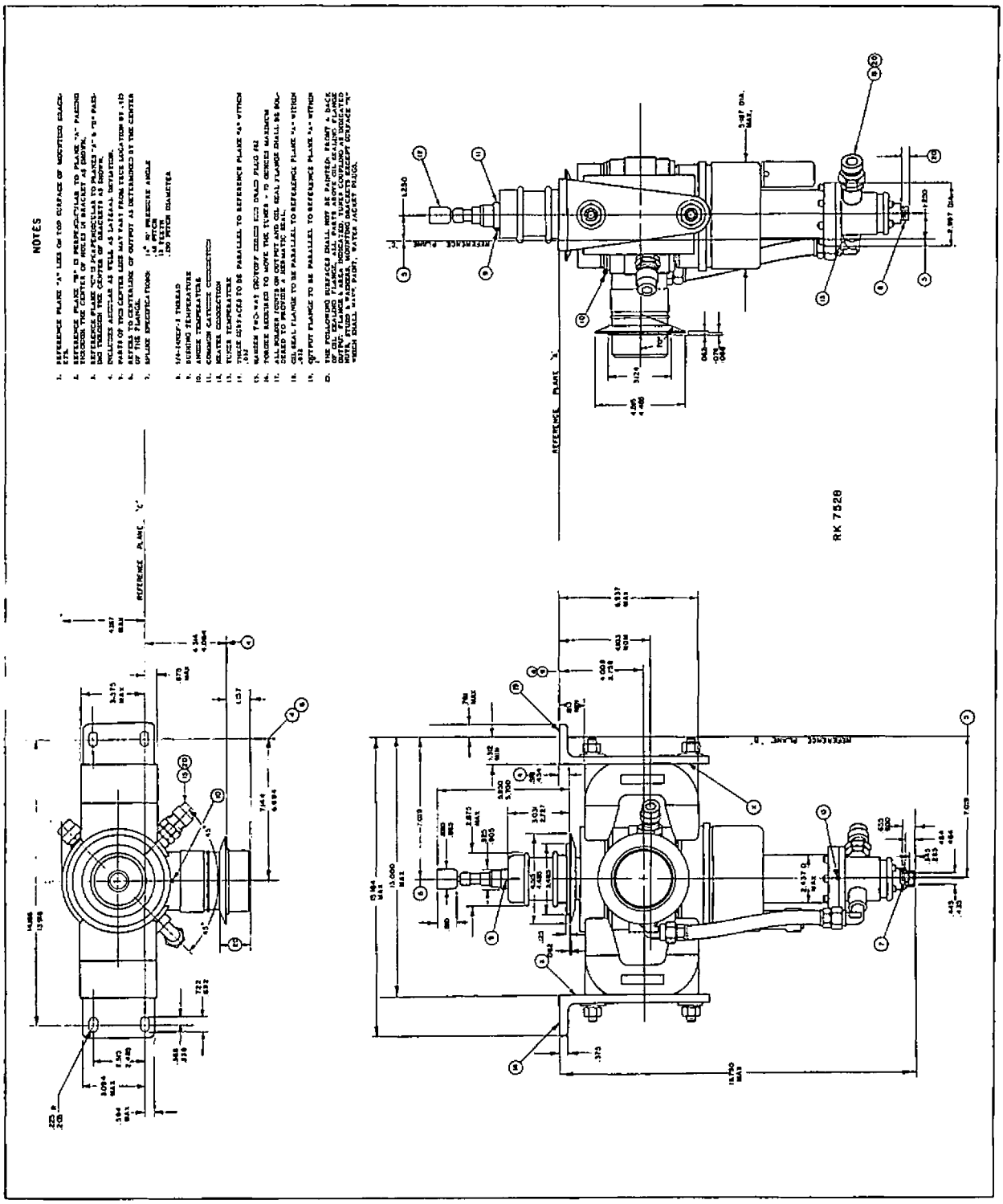
NOTES
REFERENCE PLANE 'A'
REFERENCE PLANE 'B'
REFERENCE PLANE 'C'
RK 7528