December 11, 1958

THYRATRON TYPE WL-7298

The WL-7298 is a three-electrode, inert-gas-filled, grid-controlled thyratron with negative control characteristics. Cooling is by unrestricted air convection and characteristics remain essentially unchanged over a wide range of ambient temperatures. The WL-7298 is designed for application in industrial control circuits requiring a quick heating cathode. The WL-7298 is electrically similar to the WL-5878 and WL-7299.

ELECTRICAL:

	Min.	Bogey	Max.	
Cathode	Directly Heated Coated Filament			
Filament:				
Voltage	2.37	2.50	2.63	Volts
Current at Filament Volts = 2.5	19.0	21.0	23.0	Amperes
Heating Time	60	-	-	Seconds
Ionization Time		10		usec
Critical Anode Voltage at Grid Voltage of +6 Volts	-	-	100	Volts
Critical Grid Voltage at Anode Voltage of 1500 Volts-See Fig. 1	-4.0	-9.5	-15.0	Volts
Interelectrode Capacitances (Approx.)				
Anode to Grid		1.0		uuf
Grid to Cathode		28.0		uuf
Typical Arc Drop		16		Volts
Control Characteristic				Negative

MECHANICAL:

Mounting Position	Any
Overall Height (Approx.)	7-3/8"
Overall Diameter (Maximum)	2-3/8"
Type of Cooling	Air, Unrestricted Convection
Temperature Range	-55 to +70° C
Bulb	T-18
Anode Cap	JETEC C1-5
Base	JETEC A4-90
Net Weight (Approx.)	8 oz.
Shipping Weight (Approx.)	2 lb.

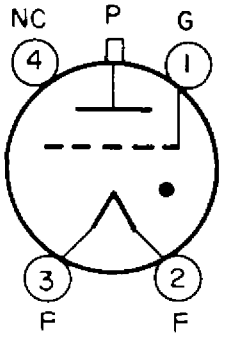

BASE CONNECTIONS

G - Control Grid
F - Filament
P - Anode
NC - No Connection

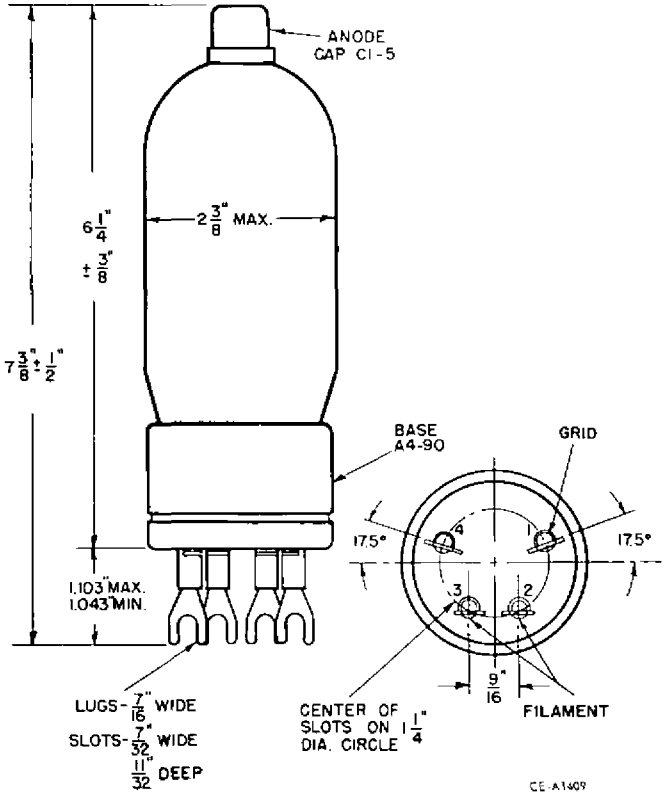

CE-A1137

WESTINGHOUSE ELECTRIC CORPORATION, ELECTRONIC TUBE DIVISION, ELMIRA, NEW YORK

from JETEC release #2354, Jan. 5, 1959

MAXIMUM RATINGS

ABSOLUTE MAXIMUM VALUES:			
Peak Anode Voltage			
Forward	1500	max.	Volts
Inverse	1500	max.	Volts
Anode Current			
Peak	80	max.	Amperes
Average (Averaging Time 15 Seconds)	6.4	max.	Amperes
Surge (Duration 0.10 Second or Less)	1120	max.	Amperes
Commutation Factor♦	200	max.	va/usec
Current Rate of Change	0.25	max.	a/usec
Voltage Rate of Change	800	max.	v/usec
Negative Control Grid Voltage			
Before Conduction	250	max.	Volts
During Conduction §	10	max.	Volts
Average Positive Control Grid Current			
Averaging Time = 1 cycle ▲	0.20	max.	Ampere
Operating Frequency ⊕	60	max.	cps

NOTES

General These ratings are important in the prevention of "clean-up" or loss of the inert gas filling. Their observance will reduce the bombardment of anode or grid by positive ions of the gas filling, which may cause the gas ions to be absorbed in the tube element concerned.

All anode and grid returns should be made to the center of the filament transformer.

♦ Commutation factor is the product of the rate of current decay in amperes per microsecond just prior to the end of commutation and the rate of inverse voltage rise in volts per microsecond just after the end of commutation. Its value should not exceed the value given in order to reduce ion bombardment of the anode during the deionization period. Limits are given on both components of this factor to correspond to factory test data limits. The limit on current rate of change is about at the highest value which is allowable under the fault current limit

§ When the tube conducts, positive ions are attracted to a grid at negative potential. This positive ion current flowing through the grid resistor will reduce the negative voltage at the grid from the higher negative grid supply voltage. To reduce ion grid bombardment, sufficient resistance must be provided to drop the negative grid supply voltage to a value not more negative than -10 volts as shown in the ratings.

▲ This rating indicates the heat emission properties of the grid. This value of current may be safely drawn to the grid if conduction occurs only while the anode is positive. However, during the period of negative anode potential, the grid potential must also be negative to prevent electrons being drawn to the grid and generating positive ions which would bombard the anode.

⊕ For higher frequency ratings, consult the tube manufacturers.

CRITICAL GRID VOLTAGE

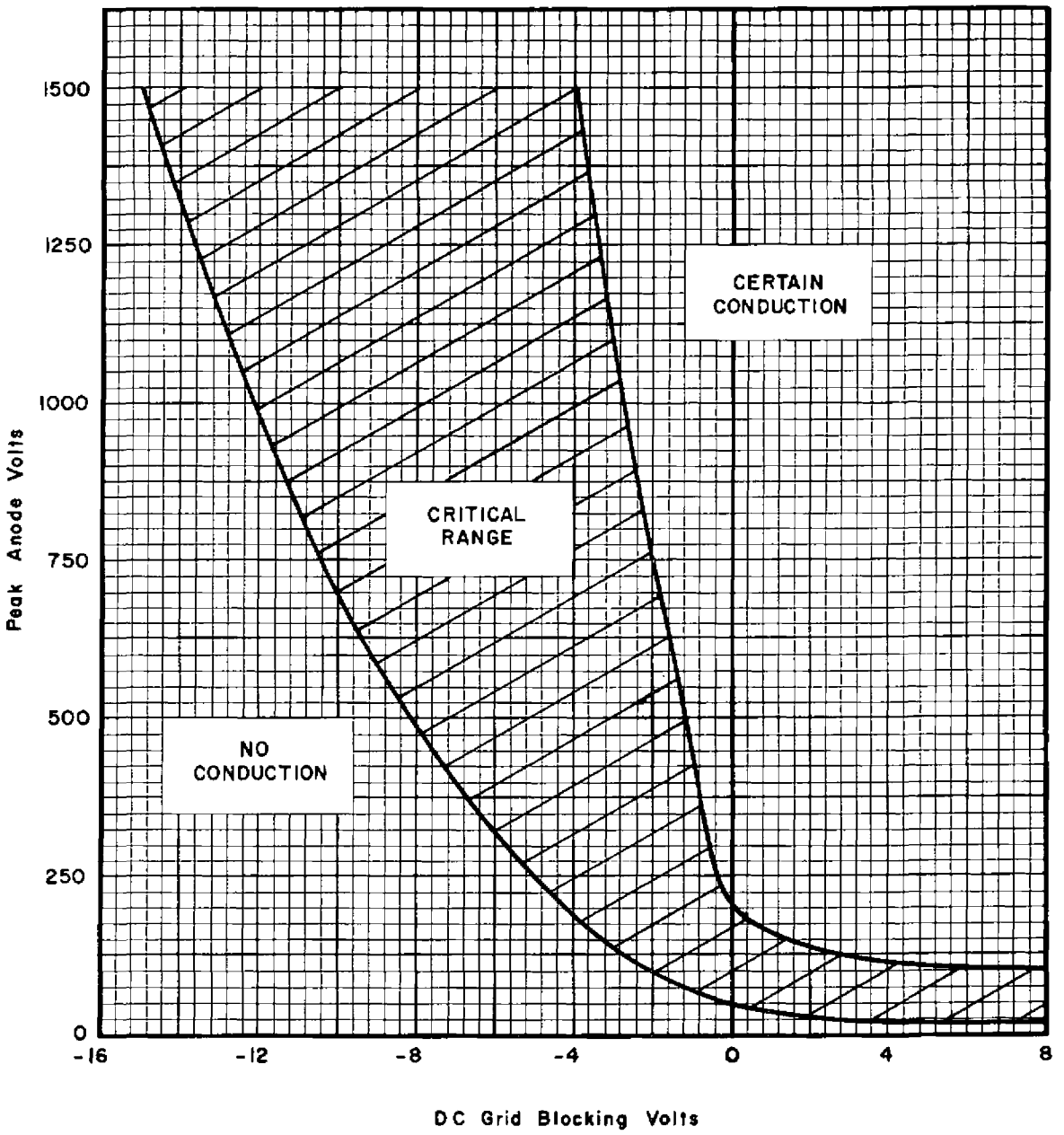

CE-A1349