from JETEC release #2239, July 7, 1958

JOINT ELECTRON TUBE ENGINEERING COUNCIL

JETEC TYPE DESIGNATION REGISTRATION FORM FOR PULSED MAGNETRONS

Manufacturers's Designation QKH 713

JETEC Designation 7256

Manufacturer Raytheon

GENERAL CHARACTERISTICS

The 7256 is a pulsed magnetron oscillator tube which operates at a tunable frequency of 8500 to 9600 Mc. The peak power output is approximately 55 kilowatts and the tube is air cooled. The tube uses a integral magnet.

With the exception of a .375" increase in the dimension between the mounting plate and the top of the tuner and the addition of a "forward lash" measurement, the 7256 is identical to an RK 2J51A.

General Electrical Data

Pre-heat Heater Voltage 6.3 ± 5 %

Pre-heat Heater Current at 6.3 Volts: 1.0 ± 0.1 Amperes

Minimum Preheat Time 180 seconds

Heater Cold Resistance 1.0 ohms

Anode-Cathode Capacitance 4.0 to 8.0 uuf

ABSOLUTE MAXIMUM RATINGS

Heater Voltage	7.0	Volts
Peak Anode Voltage	16.0	Kilovolts
Peak Anode Current	15.5	Amperes
Average Power Output	230	Watts
Duty Cycle	.0011	
Pulse Duration	3.4	Microseconds

Rate of Rise of Anode Voltage (above 85 % point)	115	kv/us
Output Circuit Pressurization	45	psia
Maximum Altitude without Pressurization		
Output Circuit	10,000	ft.
Input Terminals	10,000	ft.
Anode Temperature		
(See Outline Drawing)	150 °C	
VSWR (Magnetron Load)	1.5/1	

TYPICAL OPERATION

Oscillation 1

Current pulse duration	0.10	us
Duty cycle	.0004	
Voltage pulse rise time	0.1	us
Number of magnetic shunts	2	
Heater voltage start	6.3	V
Heater voltage operate	4.7	V
Frequency	9000	Mc
Peak anode voltage	12	kv
Peak power output	54	kw
Average power output	22	W
Peak current	14	a

Oscillation 2

Current pulse duration	1.0	us
Duty cycle	.001	
Number of magnet shunts	No shunts	
Heater voltage preheat	6.3	V
Heater voltage operate	0	V

Oscillation 2 (Con't)

Peak anode current	14	a
Frequency	9000	Mc
Peak anode voltage	13.8	kv
Peak power output	64	kw
Average power output	64	W
Peak current	14	a

General Mechanical Characteristics

Mounting	Any position
Overall dimensions	See outline dwg.
Net weight	4 lb. 14 ox. Approx.
Cooling	Forced air
Pressurization	40-45 psia
Output	Choke UG52/AU
Vibration (non-operating)	50 cps @ 10G

TUNABLE PULSED-TYPE OSCILLATOR

RK 7256

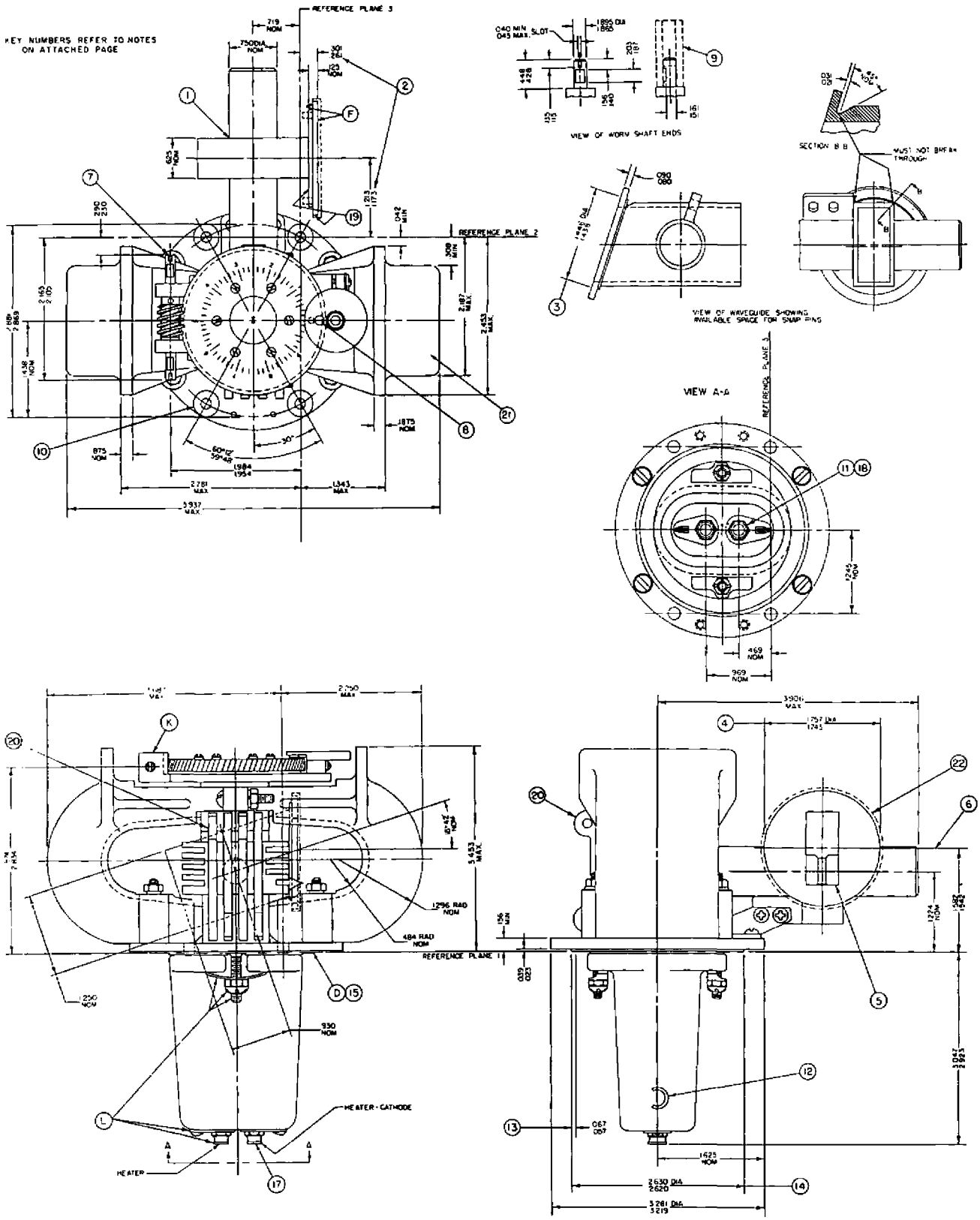

RAYTHEON MANUFACTURING COMPANY

MICROWAVE AND POWER TUBE OPERATIONS

WALTHAM 54, MASS.

TUNABLE PULSED-TYPE OSCILLATOR

NOTES:

1. All solder joints on waveguide assembly shall be soldered to provide a hermatic seal at surface "F."
2. The ±0.020" tolerance of 0.281" dimension includes angular as well as lateral deviations of the surface. These dimensions define relation of surface "F" to respective holes.
3. This diameter shall be concentric with the diameter of the flange within 0.005".
4. This diameter shall be concentric with opening in waveguide within 0.010".
5. The opening in the waveguide shall be enclosed by a dust cover when the tube is not in use.
6. Center line of waveguide opening.
7. To increase frequency, drive this end of worm shaft in counterclockwise direction. Complete frequency range covered in approx. 125 turns. Tuning mechanism shall operate smoothly over the entire mechanical range when subjected to a torque of 1-½ in. -lbs. applied at the worm shaft. In equipment no less than 1½ in. -lbs. nor more than 2½ in. -lbs. shall be applied at drive shaft. The gear and worm threads must be free from corrosion, paint, and other imperfections.
8. Number appearing here indicates number of complete revolutions of gear from 0 to 6. With the Geneva and gear seat at 3 and 0 respectively, the frequency of tube is 9000 ± 25 mc under oscillation 3 on TSS.
9. It shall be possible for a sleeve 0.195" I.D. x 0.406" O.D. x 1" long to pass over ends of shaft to face of worm bracket.
10. Four 0.193" ± 0.003" dia. holes 7/32" min. clearance around four holes at base plate. This clearance shall be free from black finish.
11. The jack holes shall be within a radius of 0.023" of the specified location but shall be spaced 0.500" ± 0.010" with respect to each other. The center line of the jack holes shall be perpendicular to mounting plate within 3°.
12. "C" indicates adjacent jack is the common heater-cathode connection.
13. With 1/16" seat resting on a plane surface, the flatness of the seat shall be such that a 0.010" thickness gauge ⅛" wide shall not pass under.
14. All solder joints on base plate shall be soldered to provide a hermatic seal.
15. Any portion of the assembly extending below this surface shall be within a 1-7/64" radius on the true center of the plate.
16. All metal surfaces covered by black finish except surfaces "D" and "F," drive and stop mechanism "K," surface around holes as specified in Note 10, parts associated with glass insulator "L," and shunts.
17. Locking-type jack — see latest issue of JAN-1A.
18. Hex-head banana pin jack 19/32" long, hole 0.169" ± 0.005" dia.
19. Black finish may be omitted from the edges and back of waveguide.
20. Four magnet shunts. For number of magnet shunts to be retained, see Technical Information. To remove surplus, grip firmly at tabs with suitable pliers and pull away from tube.
21. WARNING — Maintain 2"-min. clearance between this magnet and magnetic materials (magnet, steel tools, plates, etc.).
22. Waveguide cover required for shipping purposes only.