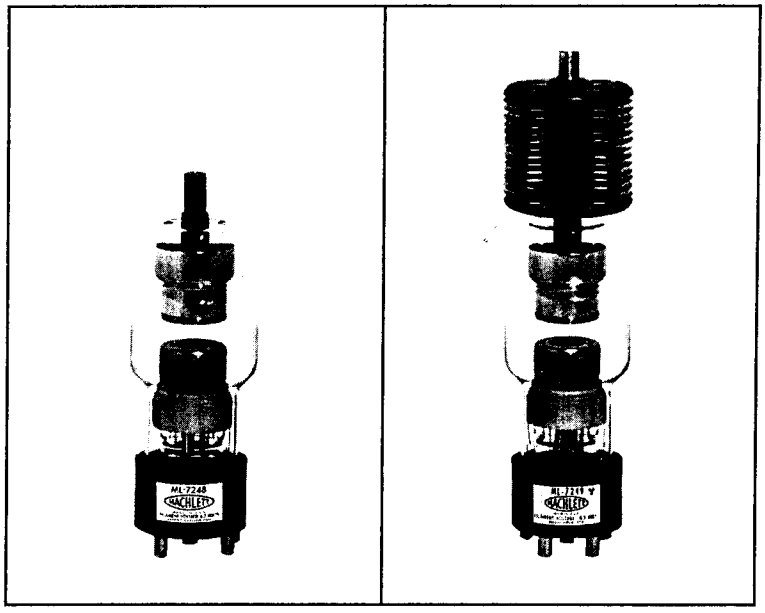

ISSUED 5-64

ML-7248
ML-7249

High Voltage Tetrodes

Plate Voltage
to 125 kV

MACHLETT
ELECTRON TUBE SPECIALIST

DESCRIPTION

The **ML-7248** and **ML-7249** are high-voltage tetrodes designed for use as switch tubes in hard pulse modulators for radar application and as general-purpose electronic switches in high-voltage switching and control circuits. The cathode of each type is a thoriated-tungsten filament.

The **ML-7248** is designed for oil-immersed operation and has a maximum d-c plate voltage rating of 125 kV. The **ML-7249**, which incorporates a radiator for increased plate dissipation ratings, is designed for either air insulation or oil-immersed operation. When operated in air, the maximum d-c plate voltage rating is 65 kV; in oil, the corresponding rating is 125 kV.

GENERAL CHARACTERISTICS

Electrical	
Filament Voltage	6.3 volts
Filament Current, approximate	11.7 Amps
Direct Interelectrode Capacitances, approximate	
Cathode-control grid	6.7 $\mu\mu f$
Cathode-screen grid	3.5 $\mu\mu f$
Cathode-plate	0.08 $\mu\mu f$
Plate-control grid	0.08 $\mu\mu f$
Plate-screen grid	2.0 $\mu\mu f$
Control grid-screen grid	20.0 $\mu\mu f$
Mechanical	
Mounting Position	Horizontal or vertical cathode end down
Type of Cooling	
With oil insulation — ML-7248 & ML-7249	Convection†
Maximum oil temperature for maximum dissipation	75 °C
With air insulation — ML-7249	Forced air‡
Air flow on radiator	See Air Cooling Characteristics
Maximum incoming air temperature	50 °C
Maximum Glass Temperature	150 °C
Net Weight, approximate	
ML-7248	2.5 lbs.
ML-7249	4.3 lbs.

†When the ML-7248 or ML-7249 is mounted cathode end down in oil, a minimum oil flow of 3 pints per minute must be directed at the cathode stem during the application of filament power. Oil must be forced through the radiator of the ML-7249 in the vertical position.

‡When the ML-7249 is operated in air, a minimum air flow of 1½ cfm must be directed into the cathode stem before and during the application of filament power. (See outline drawing. This requirement applies to the ML-7248 if filament power is applied while the tube is in air.)

MAXIMUM RATINGS

Maximum Ratings, Absolute Values	ML-7248	ML-7249	
D-C Plate Voltage — in oil	125	125	kV
in air	—	65	kV
D-C Screen-Grid Voltage	1500	1500	Volts
D-C Control-Grid Voltage	−600	−600	Volts
Peak Negative Grid Voltage	−1500	−1500	Volts
Pulse Cathode Current*	2.0	2.0	amps
Plate Dissipation — in oil	200	350†	Watts
in air	—	200‡	Watts
Screen-Grid Dissipation	20	20	Watts
Control-Grid Dissipation	10	10	Watts

*Represents maximum usable cathode current (plate current plus current to each grid) for any conditions of operation.
†With tube horizontal only.
‡With forced-air cooling of 250 cfm minimum.

TYPICAL OPERATING CONDITIONS

Typical Operation (in oil) — Pulse High-Voltage Switching		
D-C Plate Voltage	125	kV
D-C Screen-Grid Voltage	600	Volts
D-C Control-Grid Voltage	−360	Volts
Pulse Positive Control-Grid Voltage	250	Volts
Pulse Plate Current	1.02	amps
Pulse Screen-Grid Current	0.27	amp
Pulse Control-Grid Current	0.22	amp
Tube Drop	1200	volts
Duty, maximum for this condition of operation	12	%

WARNING: Operation of this tube may produce x-rays. Adequate rayproof shielding must therefore be provided in the equipment.

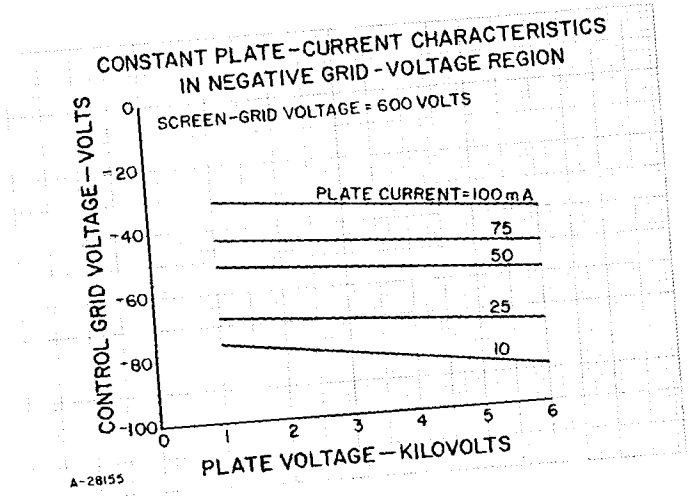

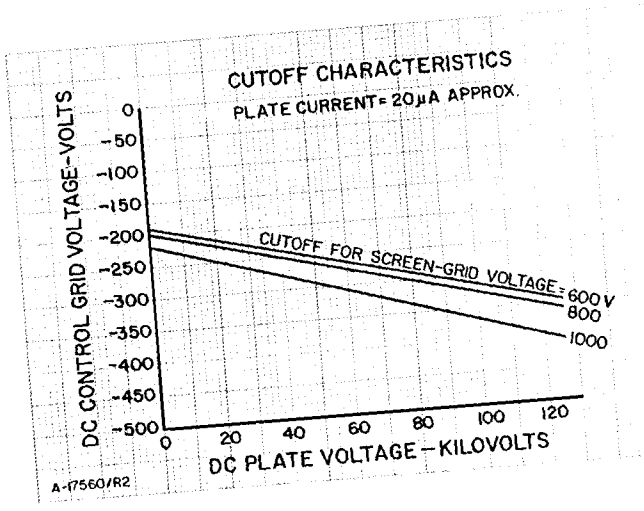

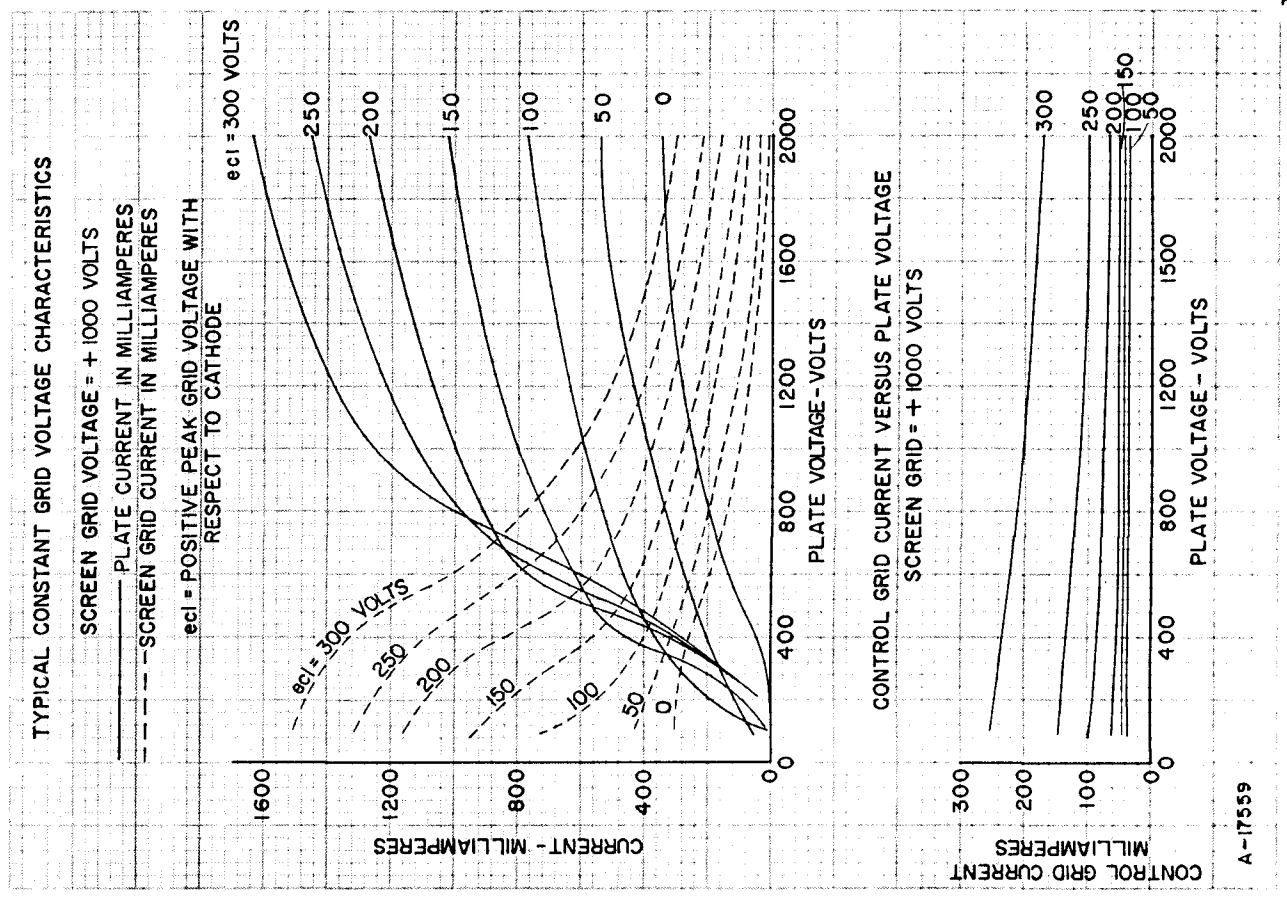
TYPICAL CONSTANT GRID VOLTAGE CHARACTERISTICS
SCREEN GRID VOLTAGE = + 1000 VOLTS
PLATE CURRENT IN MILLIAMPERES
SCREEN GRID CURRENT IN MILLIAMPERES
ecl = POSITIVE PEAK GRID VOLTAGE WITH RESPECT TO CATHODE
ecl = 300 VOLTS
250
200
150
100
50
0
CURRENT - MILLIAMPERES
PLATE VOLTAGE - VOLTS
CONTROL GRID CURRENT VERSUS PLATE VOLTAGE
SCREEN GRID = + 1000 VOLTS
CONTROL GRID CURRENT MILLIAMPERES
A-17559

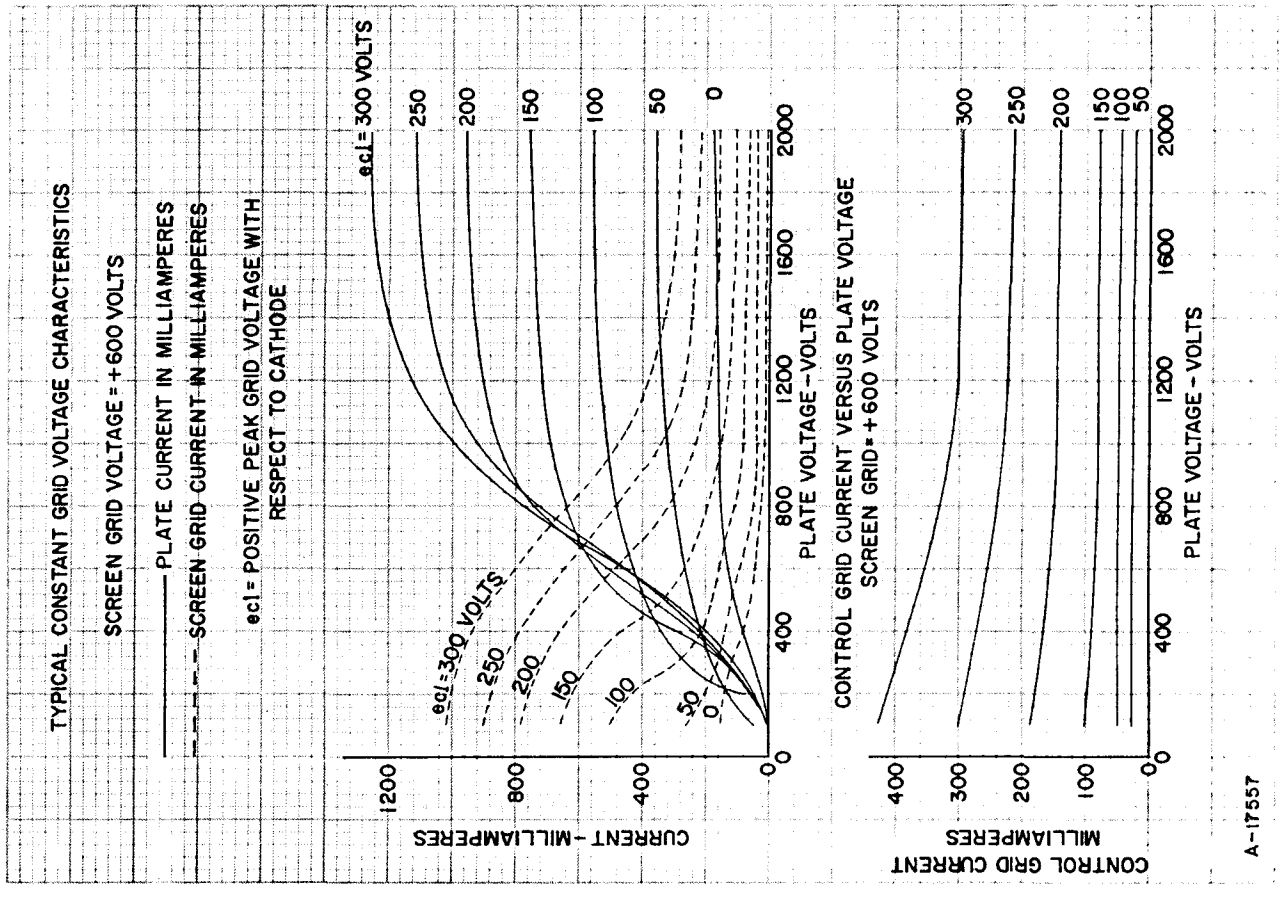
TYPICAL CONSTANT GRID VOLTAGE CHARACTERISTICS
SCREEN GRID VOLTAGE = +600 VOLTS
PLATE CURRENT IN MILLIAMPERES
SCREEN GRID CURRENT IN MILLIAMPERES
ecl = POSITIVE PEAK GRID VOLTAGE WITH RESPECT TO CATHODE
ecl = 300 VOLTS
250
200
150
100
50
0
CURRENT - MILLIAMPERES
PLATE VOLTAGE - VOLTS
CONTROL GRID CURRENT VERSUS PLATE VOLTAGE
SCREEN GRID = +600 VOLTS
CONTROL GRID CURRENT MILLIAMPERES
A-17557

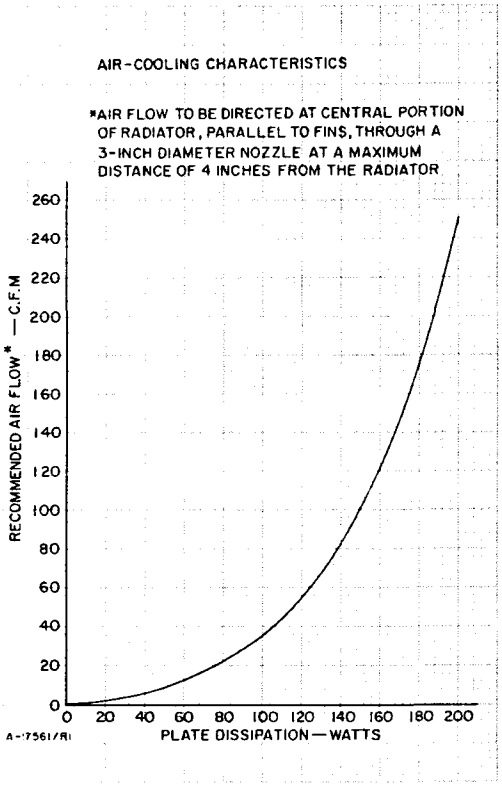

ML-7249

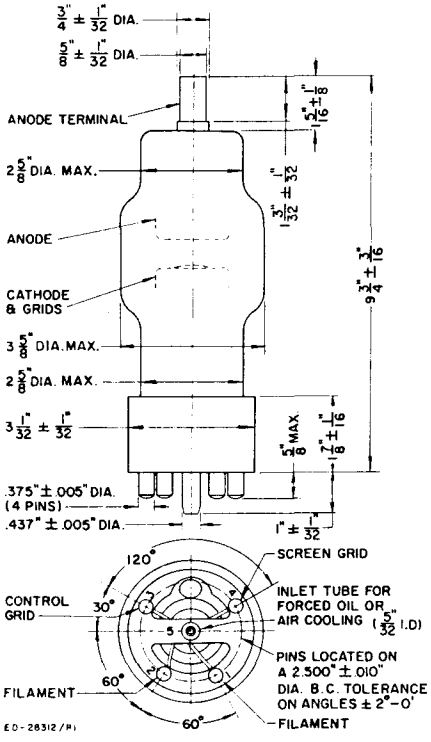

DIMENSIONS — ML-7248

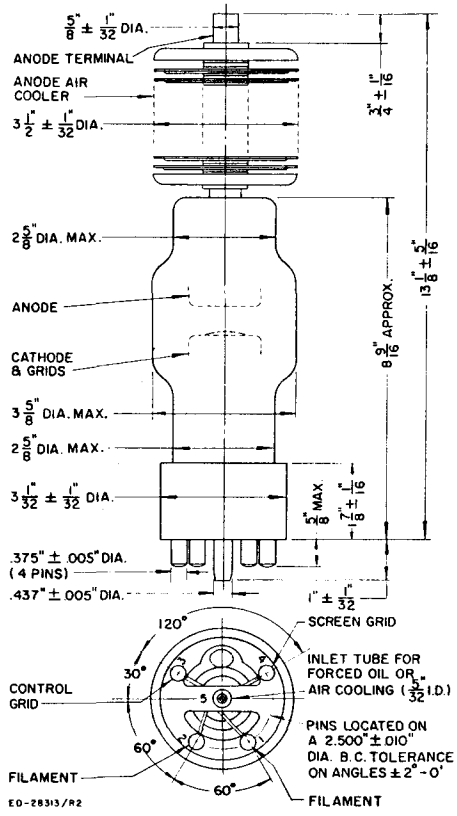

DIMENSIONS — ML-7249

THE MACHLETT LABORATORIES, INC.
An Affiliate of Raytheon Company

ST-1663 4.5M 5-64

SPRINGDALE MACHLETT **CONNECTICUT**

Printed in U.S.A.