N.U. ENGINEERING BULLETIN

ELECTRONIC COMPONENTS

from JEDEC release #3140,
Feb. 13, 1961

N. U. 7235

HIGH MU TRIODE AMPLIFIER

The 7235 is a miniature high mu triode designed for usage in regulated power supplies or voltage amplifiers operating at plate potentials between 1 KV and 10 KV. Low capacities, high gain and high voltage ratings make this tube well suited for critical television, oscilloscope, regulator or other circuits employing high voltages and low currents. The characteristics and recommended usage are similar to the National Union 2C53 triode amplifier tube. The size has been decreased for more ease in adapting to the space requirements of the designer.

ELECTRICAL DATA

Transconductance at 1500 V E_c-1.0	850
Amplification at 1500 V E_c-1.0	550
Anode Voltage	Max 10 KV
Plate Current Average	Max 5 ma
Anode Wattage	Max 10 watts

Heater Characteristics:

Heater Voltage	6.3
Heater Current	300 ma
Heater-Cathode Peak Voltage	±300 V.

Capacitance:

Control Grid to Plate	1.03 uuf
Control Grid to Cathode	2.24 uuf
Plate to Cathode	1.03 uuf

MECHANICAL DATA

Bulb	T6½
Base	(9KE) 9 Pin
Maximum Length	2-3/4"
Seated Height	2-3/8"
Cap	C1-3
Mounting Position	Any

Base Connections:

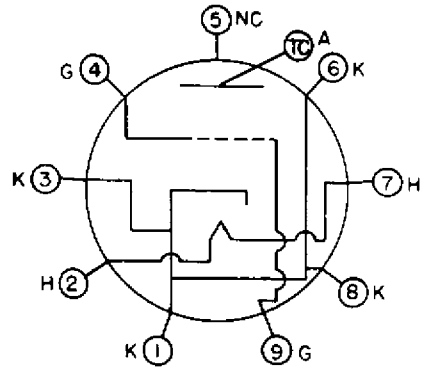

Pin 1 Cathode	Pin 6 Cathode
Pin 2 Heater	Pin 7 Heater
Pin 3 Cathode	Pin 8 Cathode
Pin 4 Grid	Pin 9 Grid
Pin 5 NC	Top Cap Anode

Dec. 1958

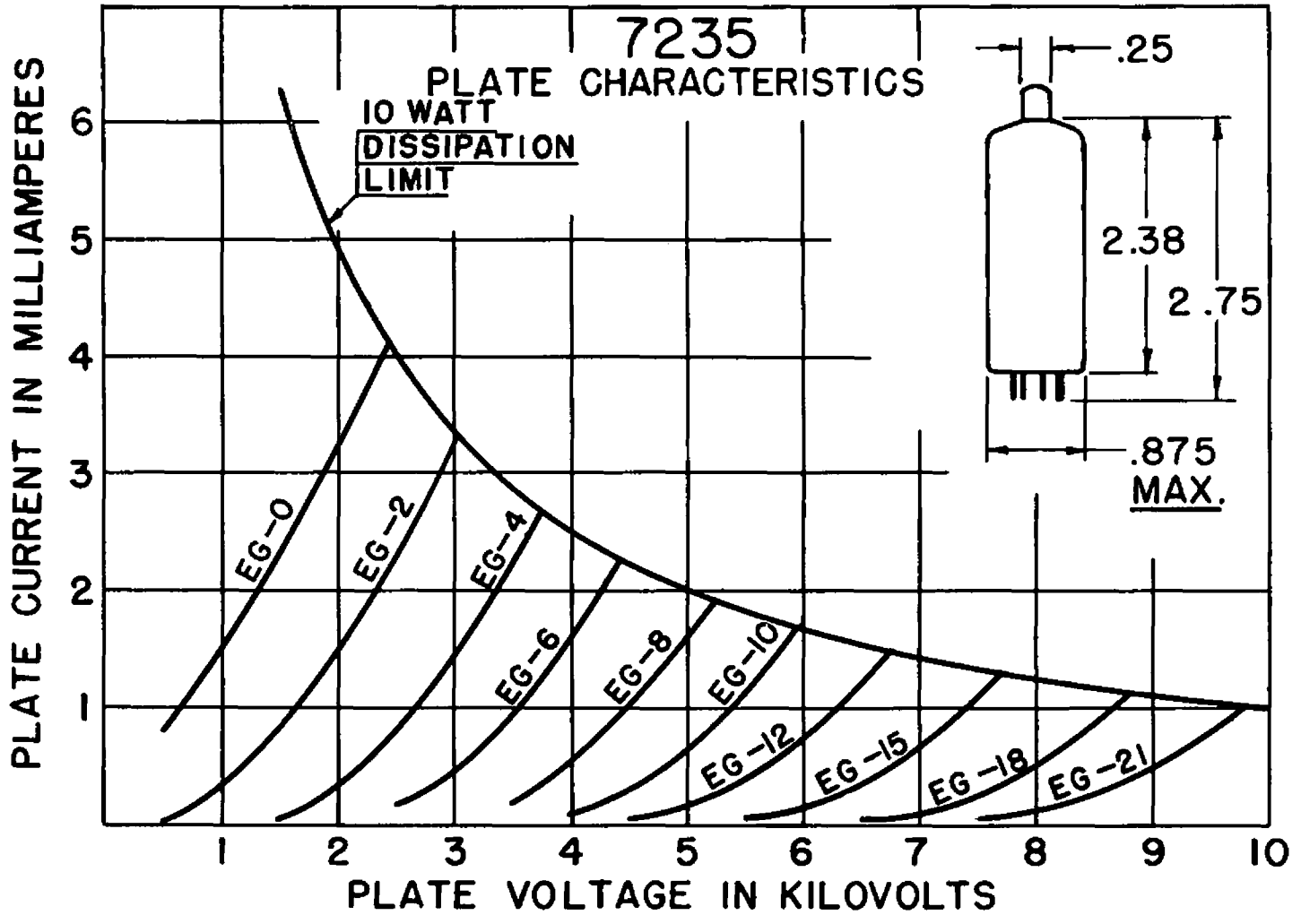

TYPICAL OPERATION – SIMPLIFIED VOLTAGE REGULATOR

E_{IN} . . . 5400 V

E_{OUT} . . 4000 V

E_K . . . . . 210 V

E. . . . . 204 V

R. . . . . 500 K

R_1 . . . . 4.7 MEG.

R_2. . . . 220 K
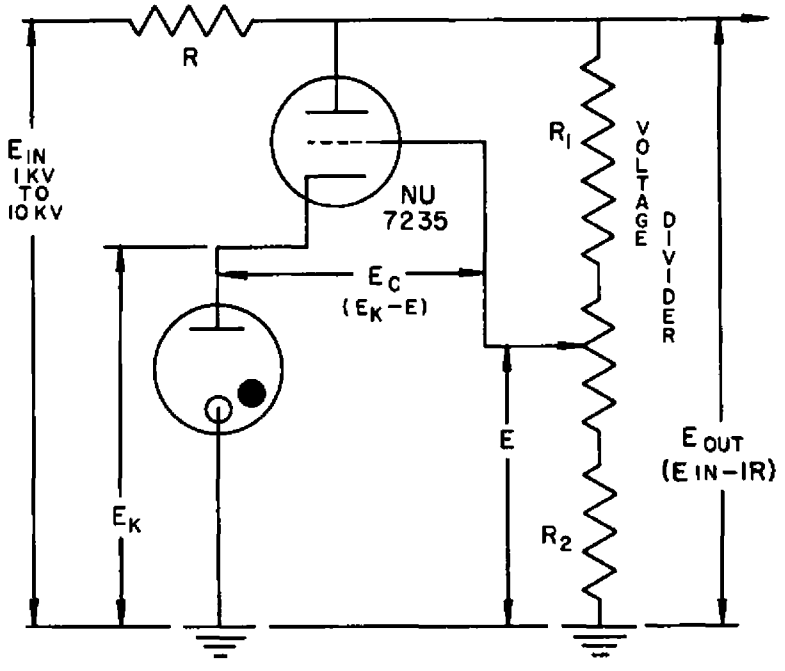
R_{VAR} . . 100 K