EITEL-McCULLOUGH, INC.
SAN CARLOS, CALIFORNIA

7211

HIGH-MU UHF TRIODE

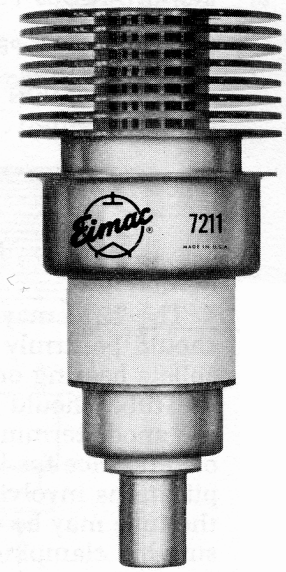

The Eimac 7211 is a ceramic-and-metal planar triode designed for use as a power amplifier, oscillator, or frequency multiplier in applications requiring greater power output than can be realized from the 7289/3CX100A5. Although similar in appearance, the Eimac 7211 incorporates a significantly improved and enlarged cathode which increases the power input capability to a maximum of 190 watts at frequencies to 2500 mc.

Exacting dimensional tolerances inherent in the manufacturing processes provide the Eimac 7211 with the maximum mechanical uniformity. Critical electrical testing results in increased reliability and a minimum variation in electrical characteristics.

GENERAL CHARACTERISTICS

Electrical

	Min.	Nom.	Max.
Cathode: Oxide-coated, Unipotential			
Heating time	60		seconds
Heater:			
Voltage		6.3	volts
Current	1.2		1.4 amperes
Amplification Factor		80	

Direct Interelectrode Capacitances	Min.	Max.
Grid-Cathode	7.0	9.0 uuf
Grid-Plate	2.1	2.4 uuf
Plate-Cathode		0.06 uuf

Frequency for Maximum Ratings - 2500 mc

Mechanical

Terminals	Graduated Cylindrical Surfaces
Maximum Operating Temperatures:	
Ceramic-to-metal Seals	250°C
Anode Core	250°C
Operating Position	Any
Cooling	Conduction and Forced Air
Maximum Overall Dimensions:	
Length	2.701 inches
Diameter	1.264 inches
Net Weight	2.5 ounces
Shipping Weight	7.0 ounces

Radio Frequency Power Amplifier or Oscillator

MAXIMUM RATING (Per Tube)

DC PLATE VOLTAGE	1000 VOLTS MAX.
DC CATHODE CURRENT	0.190 AMP. MAX.
DC GRID VOLTAGE	—150 VOLTS MAX.
DC GRID CURRENT	0.045 AMP. MAX.
INSTANTANEOUS PEAK POSITIVE GRID VOLTAGE	30 VOLTS MAX.
INSTANTANEOUS PEAK NEGATIVE GRID VOLTAGE	—400 VOLTS MAX.
PLATE DISSIPATION	100 WATTS MAX.
GRID DISSIPATION	2 WATTS MAX.

TYPICAL OPERATION (Per Tube)	Power Amplifier Grounded-Grid (key-down conditions) 500 Mc	2500 Mc
DC PLATE VOLTAGE	900	900 Volts
DC GRID VOLTAGE (approx.)	—30	—20 Volts
DC PLATE CURRENT	140	140 Ma.
DC GRID CURRENT (approx.)	40	15 Ma.
DRIVING POWER (approx.)	9	- - Watts
USEFUL OUTPUT POWER	65	25 Watts

(Effective 9-1-64) Copyright 1964 by Eitel-McCullough, Inc.

PLATE MODULATED RADIO FREQUENCY AMPLIFIER OR OSCILLATOR

MAXIMUM RATINGS (Per Tube)

DC PLATE VOLTAGE	600 VOLTS MAX.
DC CATHODE CURRENT	0.140 AMP. MAX.
DC GRID VOLTAGE	—150 VOLTS MAX.
DC GRID CURRENT	0.050 AMP. MAX.
INSTANTANEOUS PEAK POSITIVE GRID VOLTAGE	30 VOLTS MAX.
INSTANTANEOUS PEAK NEGATIVE GRID VOLTAGE	—400 VOLTS MAX.
PLATE DISSIPATION	70 WATTS MAX.
GRID DISSIPATION	2 WATTS MAX.

TYPICAL OPERATION (Per Tube)
500 Mc, Grounded-Grid, Carrier Conditions.

DC PLATE VOLTAGE	600 Volts
DC GRID VOLTAGE (approx.)	—20 Volts
DC PLATE CURRENT	100 Milliamp.
DC GRID CURRENT (approx.)	35 Milliamp.
DRIVING POWER (approx.)	8 Watts
USEFUL CARRIER POWER OUTPUT	25 Watts

APPLICATION

MECHANICAL

Mounting —

The 7211 may be operated in any position. It should be firmly held in place by spring-finger collets bearing on the terminal surfaces. In use the tube should seat against the underside of the anode-terminal flange which is on the plane of reference for longitudinal dimensions. In applications involving severe shock and vibration, the tube may be clamped in place by applying a suitable clamping device to the anode-terminal flange. It is recommended that no other portion of the tube be subjected to clamping forces.

Connections —

The terminals are in the form of concentric cylinders of graduated diameters conveniently used with coaxial tuning devices. Spring-fingered collets should be used to make contact with the anode, grid, cathode and heater terminals. Adequate contact area and spring pressure should be provided to minimize heating and to prevent erratic circuit performance at the higher frequencies. Non-contacting or intermittently-contacting collet fingers will cause troublesome circuit behavior, especially at very-high and ultra-high frequencies. Electrode contact surfaces should be kept clean and free of oxide coatings.

Cooling —

Sufficient cooling air must be provided for the anode and body seals to maintain operating temperatures below the rated maximum value of 250° C.

At sea level, with an inlet air temperature of 20°C (68°F), 12.5 cubic feet per minute of air flow is required to cool the anode at 100 watts plate dissipation when the air cowling as illustrated is used. Operation at higher altitudes or with higher inlet temperatures requires increased volumes of flow to obtain equivalent cooling. When using the anode cowling as illustrated here, it is necessary to provide additional facilities for seal cooling.

It should be borne in mind that operating temperature is the sole criterion of cooling effiveness, regardless of the coolant type, flow rate or coolant temperature. One method of measuring the surface temperatures is the use of temperature sensitive lacquer, such as "Tempilaq."

ELECTRICAL

Heater Operation —

The rated heater voltage for the 7211 is 6.3 volts. The heater voltage for the 7211 should be maintained within plus or minus 5% of its intended value to minimize variations in circuit performance and to obtain maximum tube life.

At frequencies above approximately 1000 megacycles, transit time effects begin to influence cathode temperature. The amount of driving power diverted to heating the cathode by back-bombardment will depend upon the frequency, the plate current, driving power, and duty factor. If the conditions of operation result in appreciable cathode back-heating, it may be necessary to start dynamic tube operation at normal heater voltage followed by a reduction of heater voltage to a lower value.

Cathode Operation —

The oxide-coated unipotential cathode in this tube must be protected against excessively high emission currents. For all types of operation the maximum rated dc current is 190 milliamperes.

It is recommended that the rated heater voltage be applied for a minimum of 60 seconds before other operating voltages are applied.

Control Grid Operation —

Grid dissipation must not exceed the rated maximum 2.0 watts grid dissipation power. In pulse applications the instantaneous peak grid-to-cathode voltage must be limited to —250 to —750 volts.

Special Applications —

If it is desired to operate this tube under conditions widely different from those given here, write to Power Grid Tube Marketing, Eitel-McCullough, Inc., 301 Industrial Way, San Carlos, California, for information and recommendations.

NOTES:

1. MEASURE ANODE SHANK TEMPERATURE ON THIS SURFACE.
2. DO NOT CLAMP OR LOCATE ON THIS SURFACE.
3. HOLE PROVIDED FOR TUBE EXTRACTOR THROUGH TOP FIN ONLY.

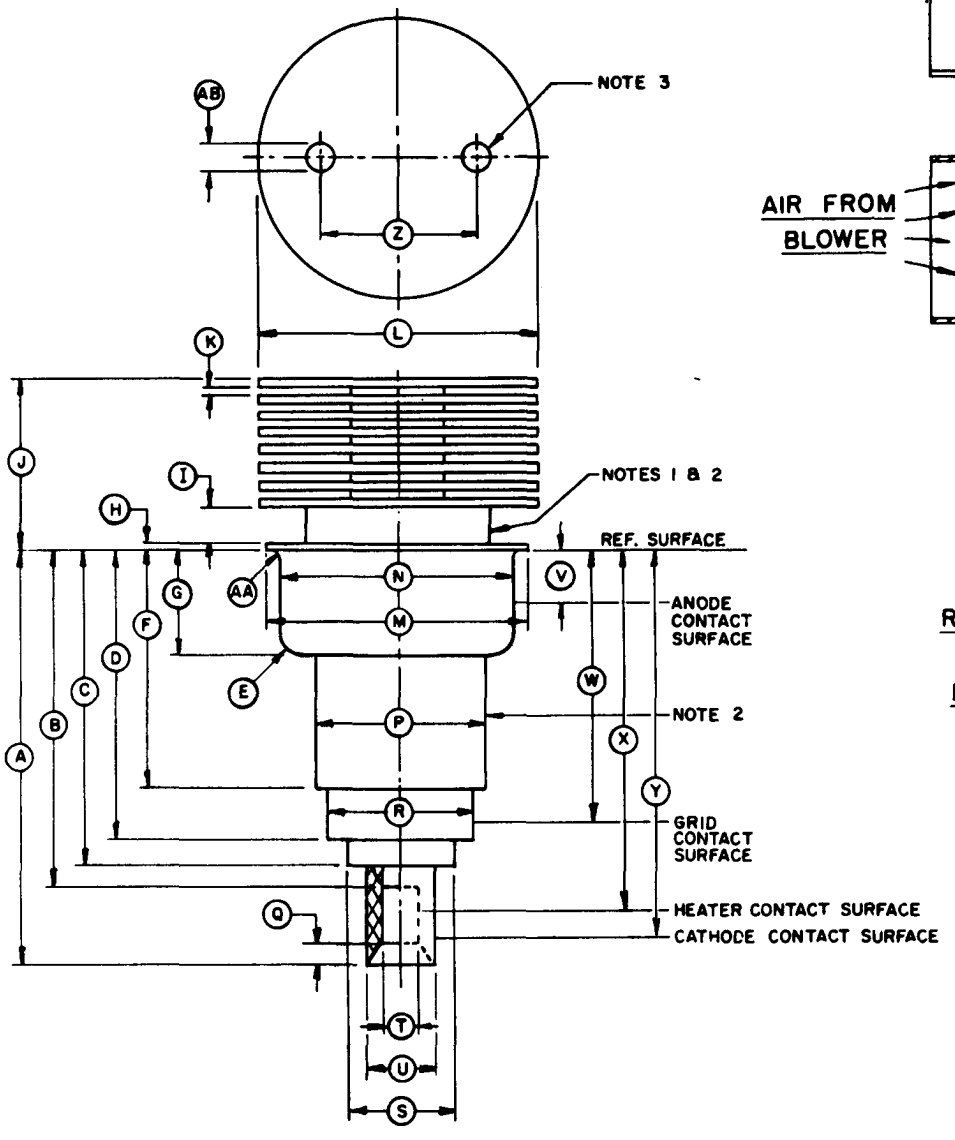

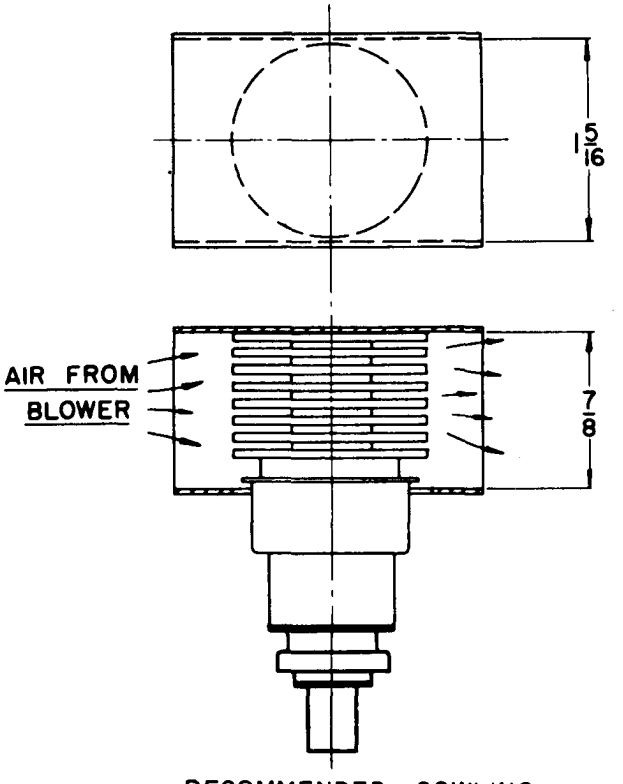

RECOMMENDED COWLING FOR FORCED-AIR COOLING OF ANODE

DIMENSIONAL DATA			
REF.	MIN.	MAX.	NOM.
A	1.815	1.875	
B		1.534	
C		1.475	
D	1.289	1.329	
E		.100	
F	.970	1.010	
G	.462	.477	
H		.040	
I	.125	.185	
J	.766	.826	
K	.025	.046	
L	1.234	1.264	
M	1.180	1.195	
N	1.025	1.035	
P	.772	792	
Q		086	
R	.655	.665	
S		.545	
T	213	.223	
U	.315	.325	
Z	.650	.850	
AA		.035	
AB	.105	.145	

NOTES:

1. The total indicated runout of the anode contact surface and the grid contact surface with respect to the cathode contact surface shall not exceed .020.

2. The total indicated runout of the heater contact surface with respect to the cathode contact surface shall not exceed .012.

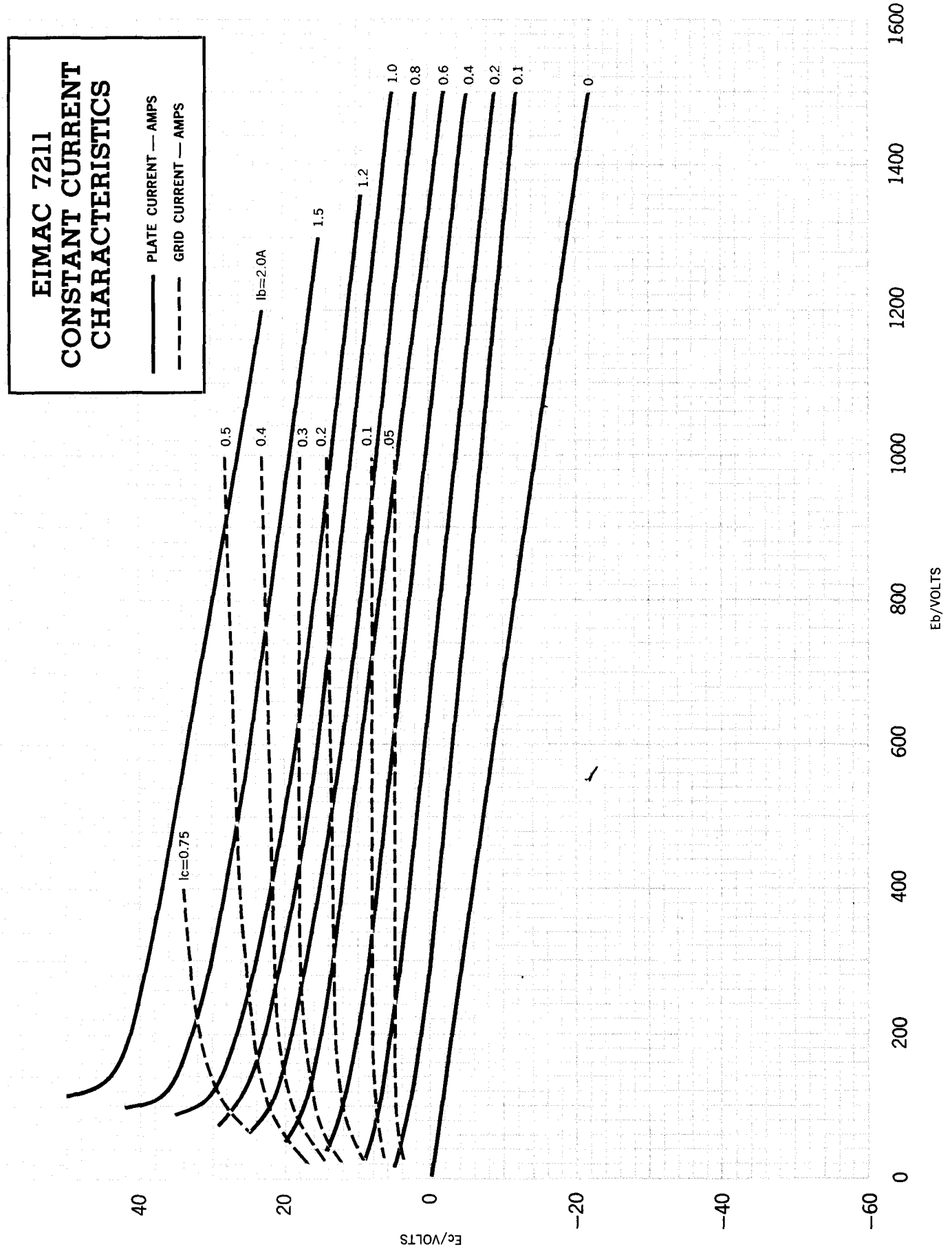
EIMAC 7211
CONSTANT CURRENT
CHARACTERISTICS
PLATE CURRENT — AMPS
GRID CURRENT — AMPS
Ib=2.0A
1.5
1.2
1.0
0.8
0.6
0.4
0.2
0.1
0
0.5
0.4
0.3
0.2
0.1
.05
Ic=0.75
40
20
0
−20
−40
−60
Ec/VOLTS
0
200
400
600
800
1000
1200
1400
1600
Eb/VOLTS