MAGNETRON

7182
(M543)

American Designation 7182

INTRODUCTION

The 7182 is a water and forced-air cooled, multi-resonator, pulse operated Magnetron with a peak input power rating of 6MW and operates at a fixed frequency within the limits of 2750 and 2860Mc/s when used under the conditions specified below.

The valve is designed for use with a separate water cooled electro-magnet and waveguide launching section, having dimensions as shown on pages 8 and 9. The user is invited to consult the English Electric Valve Co. Ltd. on the design of magnets.

The launching section is designed for waveguide No. 10 (2·840 inches × 1·340 inches internal dimensions).

The waveguide may be pressurised to 65lb/sq.in. absolute when the leakage will not exceed 0·03 litre (N.T.P.) per minute. The minimum waveguide pressure is 35lb/sq.in. absolute.

GENERAL DATA

Electrical

Cathode..	Indirectly Heated, Oxide Coated	
Heater Voltage (*See Note* 1)	12·0	V
Heater Current..	15·0	A
Heater Starting Current:		
Peak Value, not to be exceeded	40	A
Cathode Heating Time (Minimum) (*See Note* 1)	3	minutes

Mechanical

Overall Dimensions	15·32 × 3·26 × 3·26 inches	Max
	390 × 82·9 × 82·9 mm	Max
Net Weight	9¾ pounds (4·5 kg)	Approx
Mounting Position		Vertical only

The valve is vibration tested to ensure that it will withstand normal conditions of service.

Any lubricants used on the anode should be sulphur free.

Cooling .. .. Water and Forced-air (high pressure)

Water-cooling of the anode is incorporated with the electro-magnet, the window is cooled by air at high pressure in the waveguide, while low pressure air cooling may be used on the cathode terminal. The minimum window cooling air flow is 3cu.ft/minute N.T.P., and the maximum air inlet temperature is 70°C.

The temperature rise across the water jacket should not exceed 15°C nor the ← water flow be less than 0·75 gallon per minute. The design maximum temperature of the outlet water should be 70°C; under no conditions must 80°C be exceeded.

← Indicates a change

from JEDEC release #3825, July 23, 1962

PERFORMANCE CHART

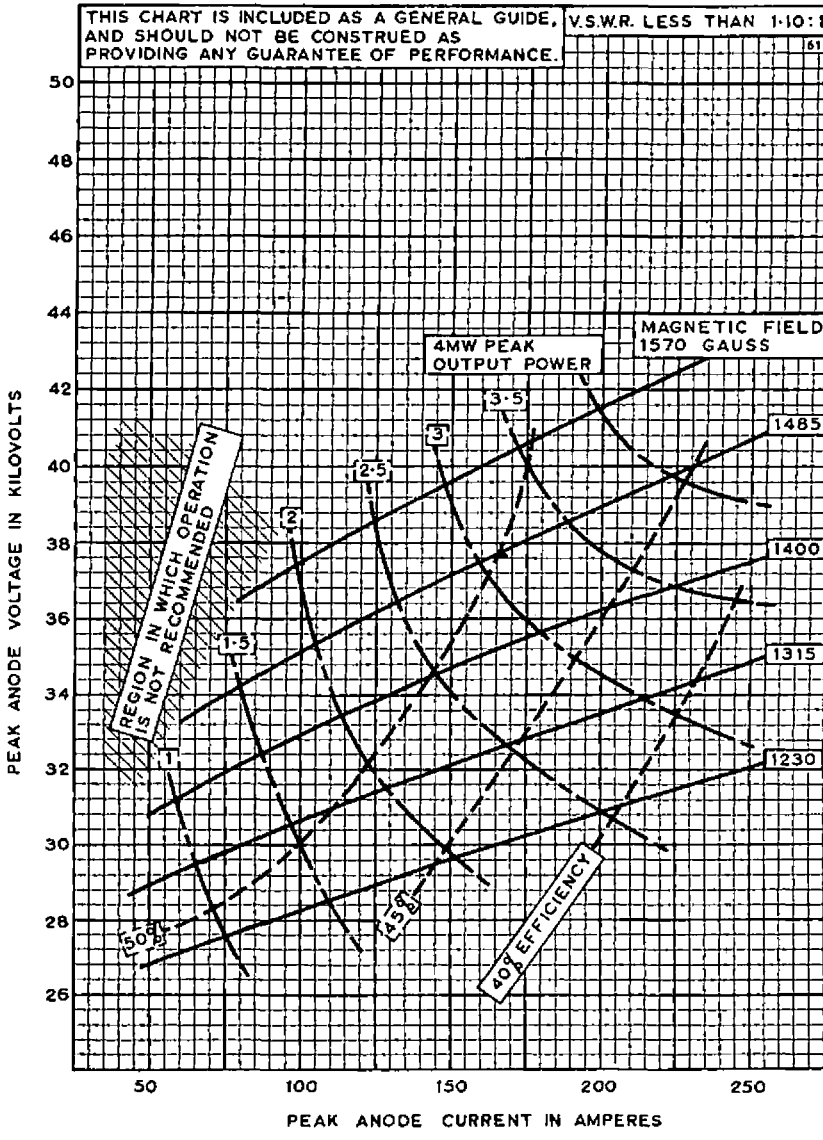

MAXIMUM AND MINIMUM RATINGS
(Absolute Values)

These ratings cannot necessarily be used simultaneously, and no individual rating should be exceeded.

	Min	*Max*	
Magnetic Field (*See Note* 3)	1340	1460	Gauss
Heater Voltage (*See Note* 1)	11·4	15·0	V
Heater Current at heater voltage 12·0V	13·0	15·0	A
Anode Voltage (Peak)	32	38	kV
Anode Current (Peak)	125	185	A
Input Power (Peak)	—	6	MW
Input Power (Mean) (*See Note* 14)	—	8·5	kW ←
Duty Cycle	—	0·0015	
Pulse Length (*See Note* 2)	0·5	5	μsec
Pulse Repetition Rate	—	600	p.p.s.
Rate of Rise of Voltage Pulse	100	150	kV/μsec
Anode Temperature (*See Note* 3)	—	150	°C
Cathode Terminal Temperature (*See Note* 3)	—	150	°C
Frequency Change with Anode Temperature Change (after warming)	—	−0·05	Mc/s/°C
V.S.W.R. at the output coupler (*See Note* 4)	—	1·5:1	

TYPICAL OPERATION

Heater Voltage	0	V
Magnetic Field	1400	Gauss
Anode Voltage (Peak)	35	kV
Anode Current (Peak)	157	A
Pulse Length	5·0	μsec
Pulse Repetition Rate	300	p.p.s. ←
Output Power (Peak)	2·5	MW
Output Power (Mean)	3·75	kW ←

← Indicates a change.

TEST CONDITIONS AND LIMITS

The valve is tested to comply with the following electrical specification

	Oscillation 1	Oscillation 2	Oscillation 3	
Air Flow	(*See Note* 5) (*See Note* 6)	(*See Note* 5)		
Magnetic Field (*See Note* 7)	1400	1400	1485	Gauss
Heater Voltage (for test) ..	0	0	0	V
Anode Current (Mean) ..	235	195	213	mA
Duty Cycle	0·0015	0·001	0·0015	
Pulse Length (*See Note* 2) ..	2·5	5·0	5·0	μsec
V.S.W.R. at the output coupler	(*See Note* 8)			
Rate of Rise of Voltage Pulse (*See Note* 9)	72 to 90	150 to 180	113 to 137	kV/μsec

Limits

	Min	*Max*	*Min*	*Max*	*Min*	*Max*	
Anode Voltage (Peak) ..	33	37					kV
Output Power (Mean) ..	3375						W
Frequency	2750	2860					Mc/s
R.F. Bandwidth at ½ Power (*See Notes* 10 *and* 11) ..		1·0		0·5		0·5	Mc/s
Frequency Pulling (*See Note* 10)		7					Mc/s
Frequency Pushing (*See Note* 12)		1·0					Mc/s
Stability (*See Notes* 10, 11 *and* 13)		0·5		0·5		0·5	%

LIFE TEST

The quality of all production is monitored by the random selection of valves which are then life-tested under the Life Test conditions below. If the valve is to be run continuously under different conditions, the English Electric Valve Co. Ltd. should be consulted to verify that the life of the valve will not be impaired.

Heater Voltage	0	V
Magnetic Field	1400	Gauss
Anode Current (Mean)	235	mA
Duty Cycle	0·0015	
Pulse Length	5	μsec
V.S.W.R. at the output coupler	1·1 : 1	Max
Rate of Rise of Voltage Pulse	113 to 137	kV/μsec

Switched off for 60 minutes every 24 hours.

END OF LIFE CRITERIA
(under Test Conditions Oscillation 1)

Output Power (Mean)	2700	W Min
R.F. Bandwidth at ‡ Power (*See Notes* 10 *and* 11) ..	1·0	Mc/s Max
Frequency: Must be within Test Limits above, Oscillation 1		
Stability (*See Notes* 10, 11 *and* 13)	1·0	% Max

NOTES

1. With no anode input power.

   Prior to the application of anode voltage, the cathode shall be heated to the required initial temperature by the application of 12·0 volts to the heater for at least four minutes or by the application of 15·0 volts for three minutes. The heater voltage must not exceed 12·6 volts for longer than five minutes. Immediately after the application of anode voltage, the heater voltage shall be reduced according to the following formulæ:

   $V_h = 12{\cdot}0 - 0{\cdot}0010P_i$ for P_i less than 6000 watts

   $V_h = 30{\cdot}0 - 0{\cdot}0040P_i$ for P_i greater than 6000 watts

   where P_i = mean input power in watts.

   The valve heater shall be protected against arcing by the use of a minimum capacitance of 4000pF shunted across the heater directly at the input terminals; in some cases a capacitance as high as 2μF may be necessary depending on the equipment design. For further details see the preamble to this section.

   The valve is normally tested with a heater supply frequency of 50c/s. The ← English Electric Valve Company Ltd. should be consulted if the valve is to be operated with a heater supply of any other frequency.

2. Tolerance ±10%.

3. Measured at the point specified on the electro-magnet and launching section (page 8).

4. A phase shifter should be incorporated into the waveguide immediately before the magnetron, and adjusted, if necessary, to give a satisfactory spectrum. The standing wave ratio between 3000 and 3100Mc/s should not exceed 2·0 : 1.

5. The modulator shall be such that the pulse energy delivered to the magnetron, followed by an arcing pulse, cannot greatly exceed the normal energy per pulse.

← Indicates a change.

6. During this test the waveguide air pressure shall not exceed 35lb/sq.in. absolute and the cooling air flow shall not exceed 3cu.ft/min free air volume. There shall be no evidence of breakdown in the output waveguide during this test.

7. The value of the axial magnetic field should not vary by more than ±4% from the value at the specified point of the valve, over a distance of 2in. in either direction along the axis. The sense of the field shall be such that a north-seeking pole at the specified point is attracted towards the cathode terminal of the magnetron.

8. The load termination of the magnetron during this test shall be a waveguide with a V.S.W.R. of less than 1·1 : 1 at the oscillation frequency and less than 1·5 : 1 between frequencies 3000 and 3100Mc/s, unless otherwise specified.

9. The rate of rise of voltage is defined as the steepest tangent to the leading edge of the voltage pulse above 80% amplitude.

10. The valve shall be terminated by a mismatch giving a V.S.W.R. of at least 1·5 : 1 at the oscillating frequency. The mismatch shall be such that when the position of a voltage maximum is set to coincide with the launching section Reference Plane C–C′ (See Page 9) the position of the voltage minimum at a frequency of 3050Mc/s shall lie between ±10mm from the Reference Plane.

11. There shall be a range of at least $\lambda g/4$ where both the stability and bandwidth are less than the specified maxima, and they shall also be less than the maxima into a matched load.

12. The change in frequency when the mean input current is varied between the limits of 220 and 250mA shall be less than 1Mc/s. The current shall be varied continuously between the limits with a period not exceeding 5 seconds.

13. Pulses are defined as missing when the r.f. energy level is less than 70% of the normal energy level in the frequency range 2750 to 2860Mc/s. Missing pulses are expressed as a percentage of the number of input pulses applied during any 5 minute interval of a 10 minute test period.

14. The various parameters are related by the formula:

$$P_i = i_{apk} \times Du \times 35 \times 1000$$

where P_i = mean input power in watts
i_{apk} = peak anode current
and Du = duty cycle.

OUTLINE

487

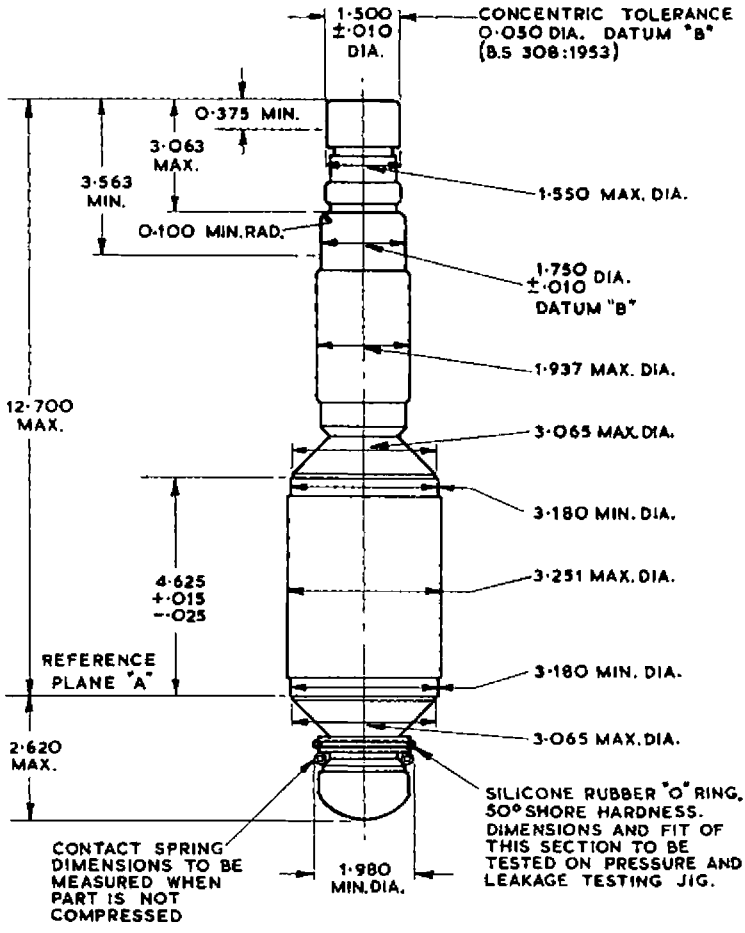

ALL METAL SURFACES WILL BE NICKEL OR SILVER PLATED

LIMITS INCLUDE ANGULAR AS WELL AS LATERAL DEVIATIONS.

ALL DIMENSIONS IN INCHES

INDICATES A CHANGE

Printed in England

ELECTRO-MAGNET AND LAUNCHING SECTION

230

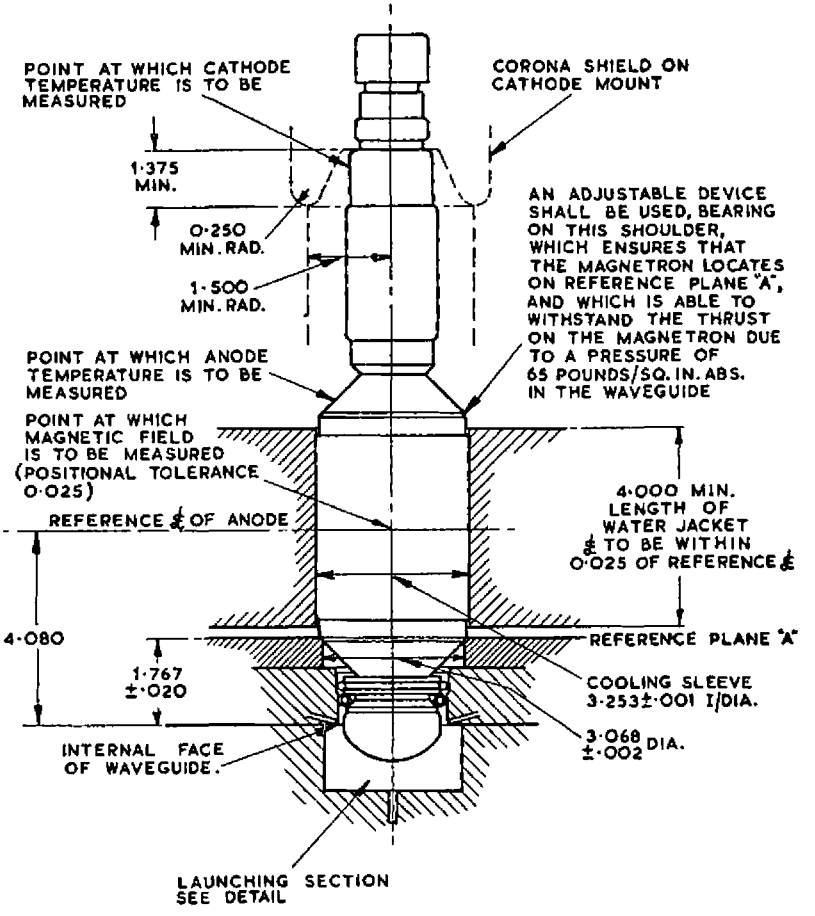

ALL DIMENSIONS IN INCHES

DIMENSIONS SHOWN WITHOUT TOLERANCE TO BE WITHIN ±·005

DETAIL OF LAUNCHING SECTION SHOWING MINIMUM REQUIREMENTS FOR INTERNAL PROFILE

120

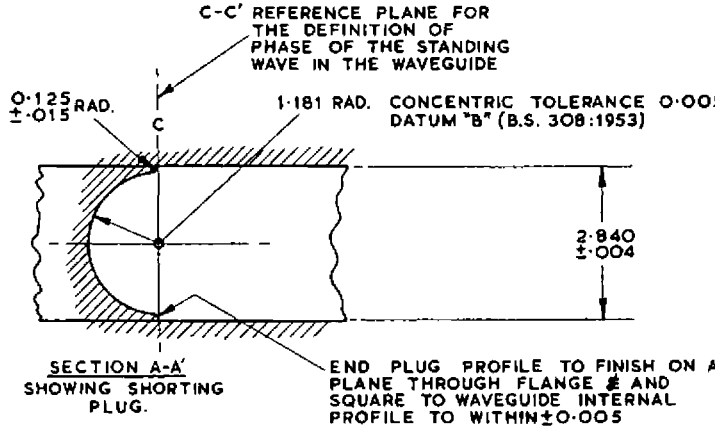

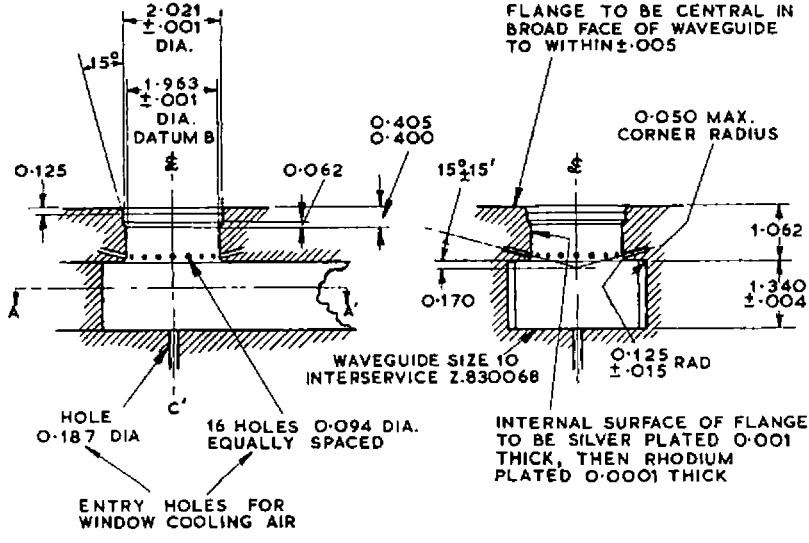

MATERIAL – BRASS