from JETEC release #2083, Jan. 20, 1958

GL-7151

IGNITRON

DESCRIPTION AND RATING

The GL-7151 is a sealed water-cooled ignitron with a stainless-steel jacket for a-c control service. In such application two tubes in an inverse-parallel connection will control 4800 kilovolt-amperes at voltages of 250 to 500 volts over a frequency range of 25 to 60 cycles. The water-cooling chamber is especially designed to provide high cooling efficiency, where this requirement exists, without increasing the over-all water-pressure drop of the cooling jacket.

TECHNICAL INFORMATION

GENERAL

Electrical

Cathode Excitation - Cyclic
Cathode Spot Starting - Ignitor
Number of Electrodes

Main Anodes	1
Main Cathodes	1
Ignitors	1

Mechanical

Envelope Material - Stainless Steel

Net Weight	70	Pounds

Thermal

Type of Cooling - Water

Inlet Water Temperature, minimum	0	C
Outlet Water Temperature, maximum	40	C
Water Flow, minimum	10	Gallons per Minute
Maximum Working Water Pressure	100	Pounds per Square Inch

MAXIMUM RATINGS

AC Control Service, Two Tubes in Inverse Parallel, Ratings per Tube

Voltage Range	250 to 600	Volts RMS
Maximum Demand	4800*	Kilovolt-Amperes
Average Current at Maximum Demand	486	Amperes
Maximum Average Current	900	Amperes
Demand at Maximum Average Current	1600	Kilovolt-Amperes

MAXIMUM RATINGS (Cont'd)

Maximum Peak Fault Current at 250 Volts.	54,000	Amperes
Maximum Peak Fault Current at 600 Volts.	22,400	Amperes
Frequency Range.	25-60	Cycles per Second

Ignitor Characteristics

Maximum Inverse Voltage.	5	Volts
Recommended Pulse Length	500	Microseconds
Minimum Pulse Length, for average anode currents greater than 20 amperes	150	Microseconds
Maximum Pulse Length	4000	Microseconds

* Maximum demand current at voltages below 500 is 9600 amperes RMS.

OUTLINE

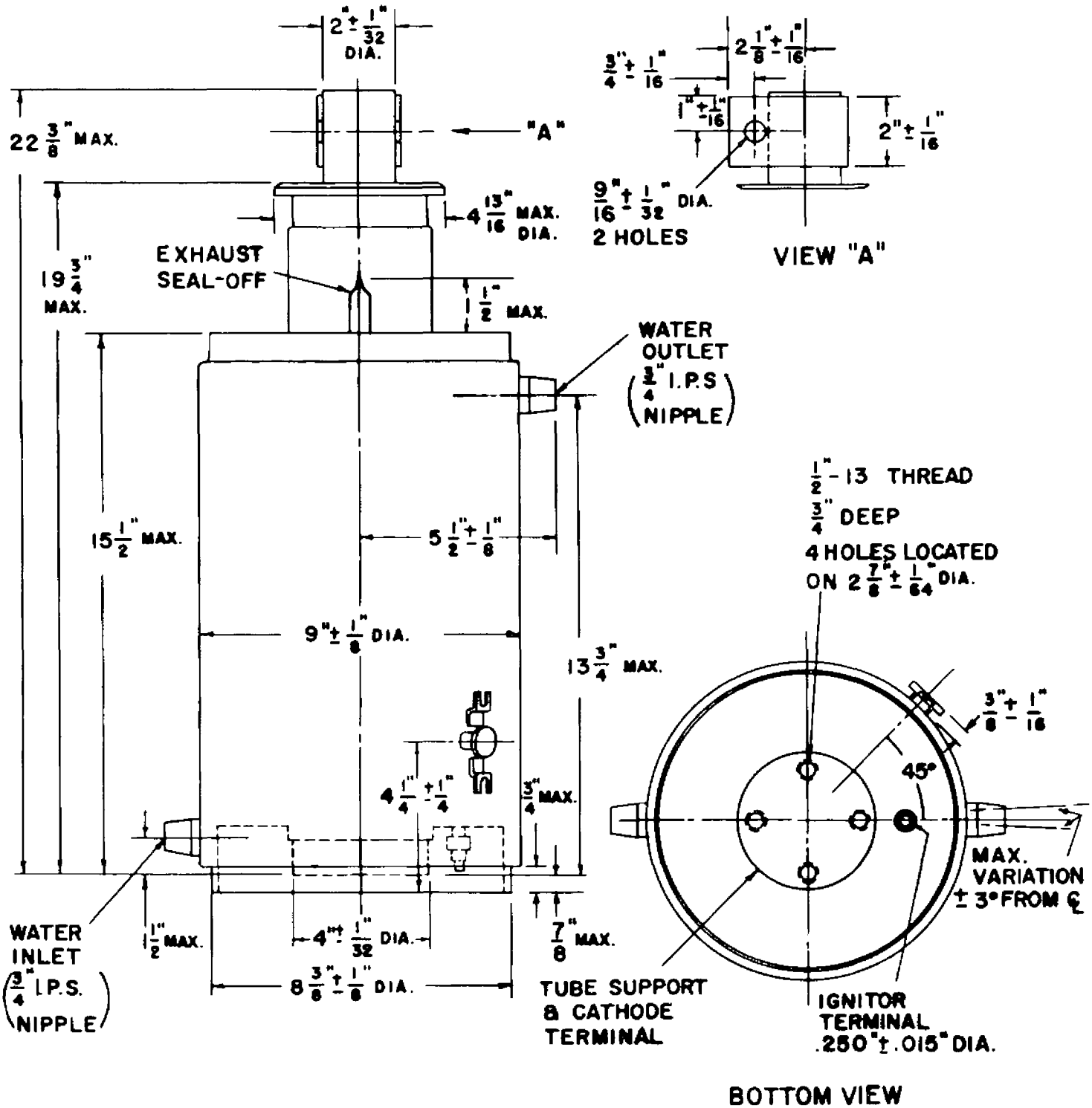
2" ± 1/32" DIA.
22 3/8" MAX.
"A"
4 13/16" MAX. DIA.
EXHAUST SEAL-OFF
19 3/4" MAX.
1 1/2" MAX.
WATER OUTLET (3/4" I.P.S NIPPLE)
15 1/2" MAX.
5 1/2" ± 1/8"
9" ± 1/8" DIA.
13 3/4" MAX.
4 1/4" ± 1/4"
3/4" MAX.
WATER INLET (3/4" I.P.S. NIPPLE)
1 1/2" MAX.
4" ± 1/32" DIA.
7/8" MAX.
8 3/8" ± 1/8" DIA.
TUBE SUPPORT & CATHODE TERMINAL
3/4" ± 1/16"
2 1/8" ± 1/16"
1" ± 1/16"
2" ± 1/16"
9/16" ± 1/32" DIA.
2 HOLES
VIEW "A"
1/2"-13 THREAD
3/4" DEEP
4 HOLES LOCATED ON 2 7/8" ± 1/64" DIA.
3/8" ± 1/16"
45°
MAX. VARIATION ± 3° FROM ℄
IGNITOR TERMINAL .250" ± .015" DIA.
BOTTOM VIEW