engineering data service 7098

ADVANCE DATA
MECHANICAL DATA

Test	Conditions
Dimensions	Fig. 1 (See Note 21)
Weight	Approx. 6 ounces
Vibration	F1 = 9500 Mc, Osc. (1), Note 6
Centrifuge	F1, Osc. (1), Note 7
Shock	F1, Osc. (1), Note 8
Rotation	F1, Osc. (1), Note 19
Magnet Isolation	Note 3
Mounting Support	Note 4
Mounting Position	Any
Tuner Drive Mechanism	Note 9
Output Coupling	Note 4
Input Connections	Note 4
Vibration, Shock	Note 5

QUICK REFERENCE DATA

Sylvania 7098 magnetron is a mechanically tunable, pulsed, air cooled, integral magnet, unipotential cathode type operating in the frequency range from 9300 to 9500 Mc at 60 watts minimum.

RATINGS

DEPENDENT ABSOLUTE RATINGS

Parameters	Ib	ib	Pi	pi	Du	tp	prr
Units	mADc	a	W	kw	.....	μs	kc
Max.	2	1.25	3.75	2.0	.002	1.5	8
Min.	.....	.75	.....	.....	.....	.25	.....

CAUTION: The dependent absolute ratings are interrelated, and it does not necessarily follow that combinations of ratings can be attained simultaneously. The provisions of paragraph 6.5 of MIL-E-1 apply in the selection of the operating point.

INDEPENDENT ABSOLUTE RATINGS

Parameters	Ef	eb	tk	VSWR	Anode T
Units	V	kv	sec	.....	°C
Max.	5.5	2.0	.....	1.5	100
Min.	.....	.....	60	.....	.....
				Note 1	Note 2

CAUTION: The independent absolute ratings must not be exceeded if the specified life is to be obtained. These independent absolute ratings are limiting values beyond which the serviceability of any individual tube may be impaired.

SYLVANIA ELECTRIC PRODUCTS INC.

SPECIAL TUBE OPERATIONS
WOBURN, MASS.

Prepared and Released By The TECHNICAL PUBLICATIONS SECTION EMPORIUM, PENNSYLVANIA

JULY, 1958

from JETEC release #2362, Jan. 19, 1959

ELECTRICAL DATA

MIL-E-1 Ref.	Test	Conditions	Sym.	Min.	Max.	Unit
4.10.8	Heater Current	Ef = 5.0 V	If:	0.6	0.7	A
4.16.3	*Oscillation (1)*		.....	.....	.....	.....
.....	Standing Wave Ratio	VSWR = 1.1 Max.	.....	.....	.....	.....
4.16.3.2	Heater Cathode Warm-up Time	tk = 45 sec at Ef = 5.0 V, Ef = 5.0 V for test	.....	.....	.....	.....
4.16.3.3	Pulse Characteristics	tp = 0.9 to 1.1 μs, Du = .002, trv = 0.1 to 0.2 μs. Notes 10, 11	.....	.....	.....	.....
4.16.3.4	Average Anode Current	Ib = 1.9 mADc	.....	.....	.....	.....
4.16.3.5	Pulse Voltage	F1, F2, F3	epy:	1.35	1.55	kv
4.16.3.6	Power Output	F at Po min, in band, Note 12	Po:	0.12	.....	W
4.16.3.7	R. F. Bandwidth	F1, Notes 12, 13	BW:	.....	3.0/tp	Mc
.....	Minor Lobes		Ratio:	6	.....	db
	R. F. Bandwidth	F1, Notes 12, 13, Ib = 1.7, 2.3 mADc	.....	.....	.....	.....
.....	Heater Voltage	Note 20	.....	.....	.....	.....
4.10.7.3.2	Tunable Frequency	Note 12	F:	9300	9500	Mc
4.16.5	Pulling Factor	F1 = 9500, F2 = 9400, F3 = 9300, Note 12	ΔF:	.....	15	Mc
4.16.6	Pushing Factor	F1, F2, F3, Notes 12, 14	F:	.....	5	Mc
4.16.7.2	Load Stability	VSWR 1.5: F1, Notes 12, 15, 16	M.P.	.....	½	%
.....	Temperature Co-efficient	T = +70 to +110, F1, F2, F3, Notes 2, 12	.....	.....	±0.1	Mc/°C
.....	Thermal Equilibrium	F1, F2, F3, Notes 12, 17	F:	.....	± 5	Mc
4.9.15	Low Temperature Operation	T = -60, Note 12	.....	.....	.....	.....
4.9.16	High Temperature Operation	T = 90, Note 12	.....	.....	.....	.....
4.11.5	Intermittent Life Test	F2: Notes 12, 18, Group D	Cycles	3000	.....	Cycle
4.11.4	Life Test End Point	Note 12	Po:	0.1	.....	W
			BW:	.....	3.0/tp	Mc
			Missing Pulses:	.....	1	%
			epy:	.....	1.65	kv

NOTES

1. *Frequency skipping or unstable operation may be encountered at some phase positions when the mismatch occurs at the end of a "long" line.*
2. *The temperature is to be measured at the point indicated on Figure 1.*
3. *In handling and mounting the magnetron, care must be exercised to prevent demagnetization. Ferromagnetic materials or energized magnets shall not be brought within two inches of the tube.*
4. *See Fig. 1 and Note 21.*
5. *Reasonable care should be used in the storage, installation, and use of the tube to avoid imparting vibration or shock in excess of the values for which it is designed to withstand.*
6. *The tube shall be subjected to vibration of 10 to 60 cps at 0.08 inch total excursion and 60 to 2000 cps at a constant acceleration of 15 g in each of three mutually perpendicular planes. Total test time shall be approximately 45 minutes. The tube shall meet the R. F. Bandwidth requirements on Osc (1) during this test.*
7. *The tube shall withstand a centrifuge test as follows: The tube shall be inserted in a centrifuge and subjected to a 500 g acceleration in the plane parallel to the cathode axis. The acceleration shall be applied gradually so that the maximum acceleration is reached in one minute; shall be maintained at maximum acceleration for one minute, and then decreased to zero acceleration in one minute. The tube shall meet R. F. Bandwidth requirements of Osc 1 during this test and the frequency under conditions of maximum acceleration shall not shift more than 2.5 Mc from the initial frequency.*

8. *With heater and pulse voltages applied, the tube shall be subjected to a linear shock of 500 g for 1.0 millisecond in a plane parallel to the major axis and 250 g in a plane normal to the major axis of the tube. The tube is not required to fulfill all requirements of Osc (1) during this test, but is to be capable of withstanding this test with no permanent damage. The tube shall meet all requirements of Osc (1) after this test.*

9. *The tube shall be tuned by: (1) unlocking the tuner by loosening the set screws on the side of the tuner housing, (2) turning the tuner screw in either direction with a non-magnetic screw driver, (3) tightening the set screws to lock the tuner.*

10. *This test need be conducted only under one set of conditions within the limits stated for the oscillations specified.*

11. *Value of voltage and current fall time, spike, ripple, inverse voltages and post pulse conditions should be minimized.*

12. *All radio frequency measurements are made by the manufacturer with waveguide as the transmission media. The coaxial line to waveguide adaptor shown on Fig. 2, will be used except for tubes having a BNC output connector.*

13. *The R. F. Bandwidth shall be within the limits specified when a VSWR of 1.5/1.0 is introduced in the load at a distance of approximately one-half meter from the magnetron coupling, the phase being adjusted for maximum power output.*

14. *The anode current shall be varied between 1.8 and 2.0 mADc. The frequency difference measured between these currents shall be within the limits specified.*

15. *No more than the specified percentage of pulses shall result in R. F. output pulses, each having less than 70% of the energy content of a normal pulse. The test shall be conducted for a period of two minutes and satisfactory operation must be obtained for each minute of this two minute period.*

16. *Two observations shall be made, those for load phase positions corresponding to maximum power and to minimum power.*

17. *The frequency shall not change in any one direction by more than the specified value in any 30 minute interval of time after the application of voltage. This test shall be made at a constant ambient temperature and with a constant input power.*

18. *The VSWR shall be 1.5/1.0. The interpretation of the value of the VSWR as used by the manufacturer and as used by others shall be as defined in paragraph 4.19.5 of MIL-E-1. The standing wave introducer shall be moved during the test so that operation is obtained for load phase positions corresponding to maximum power output, minimum power output, maximum frequency, and minimum frequency. If automatically driven, the standing wave introducer shall be cycled continuously through a line length, approximately one-half wavelength long, at a maximum rate of four cycles per hour; if manually moved, the standing wave introducer shall be cycled through the four load phase positions corresponding to maximum power, minimum power, maximum frequency, minimum frequency at least once during the specified life of the tube, spending approximately equal periods of time in each position. The application of voltage to the tube during life test shall be done in accordance with the following cycle: (a) heater preheat 45 seconds, (b) higher voltage applied 5 minutes, (c) no voltage 5 minutes. This cycle shall be repeated until the summation of high voltage application equals the specified life.*

19. *The tube shall be capable of withstanding rotation about its longitudinal axis at a rate of 300 RPM without a shift in frequency greater than plus or minus 1.25 megacycles and R. F. Bandwidth shall not exceed the limits specified in Osc (1).*

20. *Under conditions of Osc (1), the tube shall meet the bandwidth requirements when the heater voltage is varied from 5.0 to 5.5 volts.*

21. *Fig. 1 does not apply to tubes having a BNC output connector.*

FIGURE 1

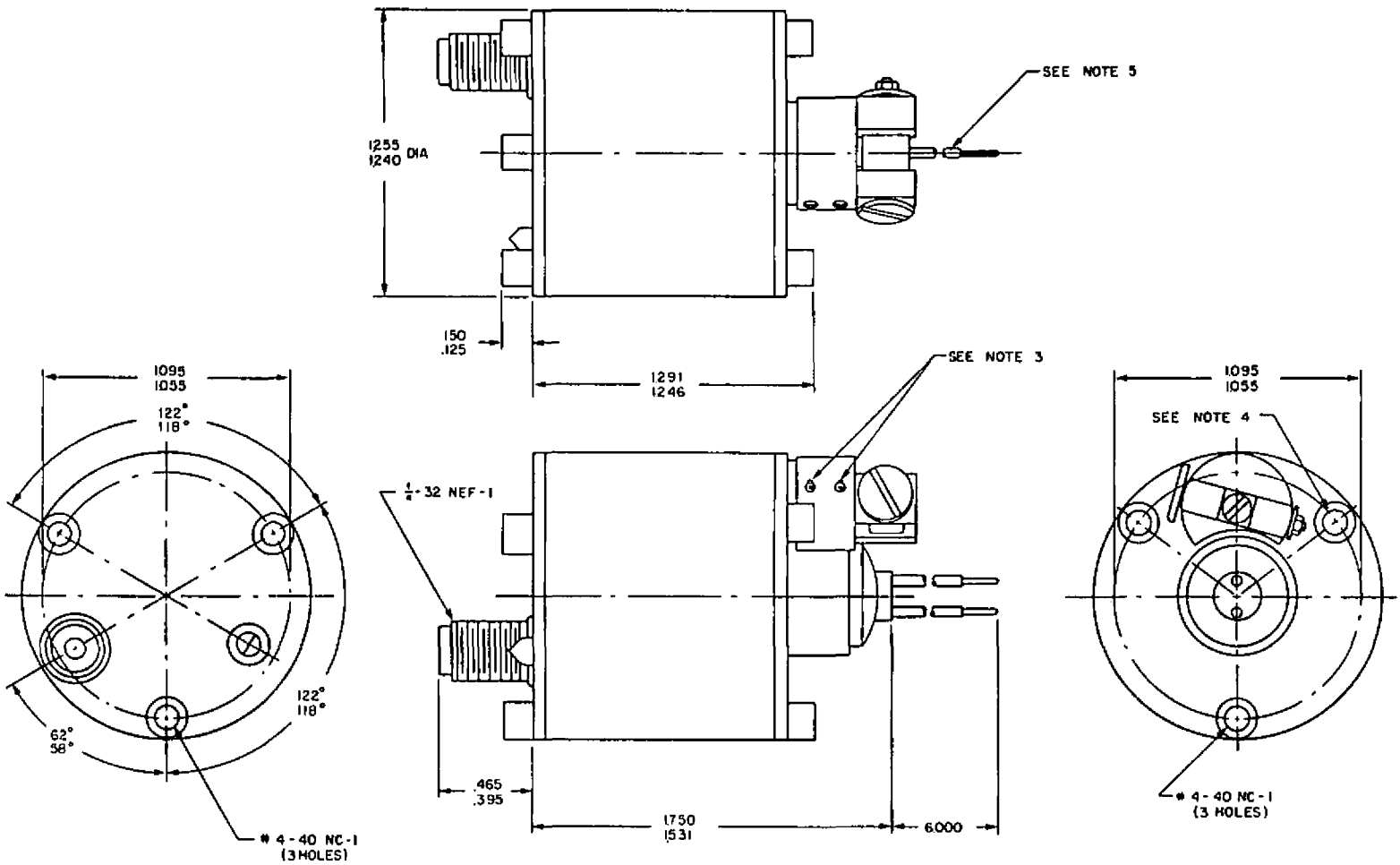

DIAGRAM NOTES

1. *Non-magnetic tools must be used when inspecting this tube.*
2. *A UG-699/U coaxial line connector attaches the load to the magnetron.*
3. *Location of #2-56 set screws (No. 2, 4 flute multiple, spline socket screw to be used).*
4. *Tapped hole in mounting nut to be used for measuring anode temperature.*
5. *Red lead is common cathode connection.*
6. *Center of output to lie on .685 - .747 Dia circle as shown.*

FIGURE 2

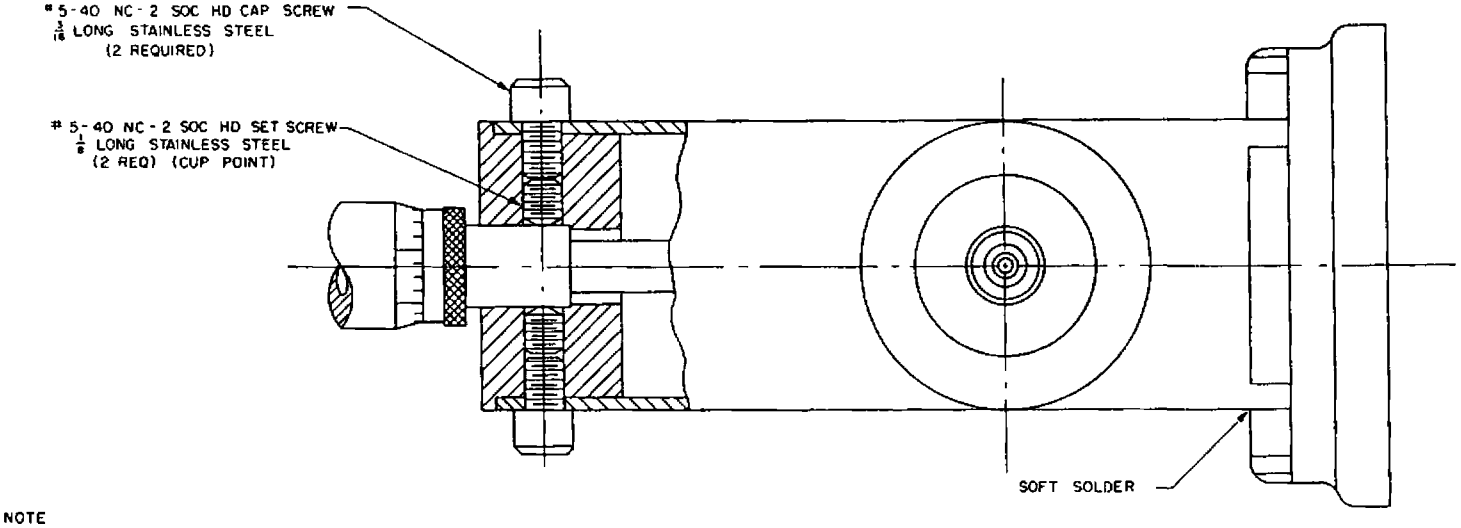

NOTE
A - SILVER PLATE ALL EXTERIOR SURFACES
WITH THE EXCEPTION OF THE MICROMETER HEAD

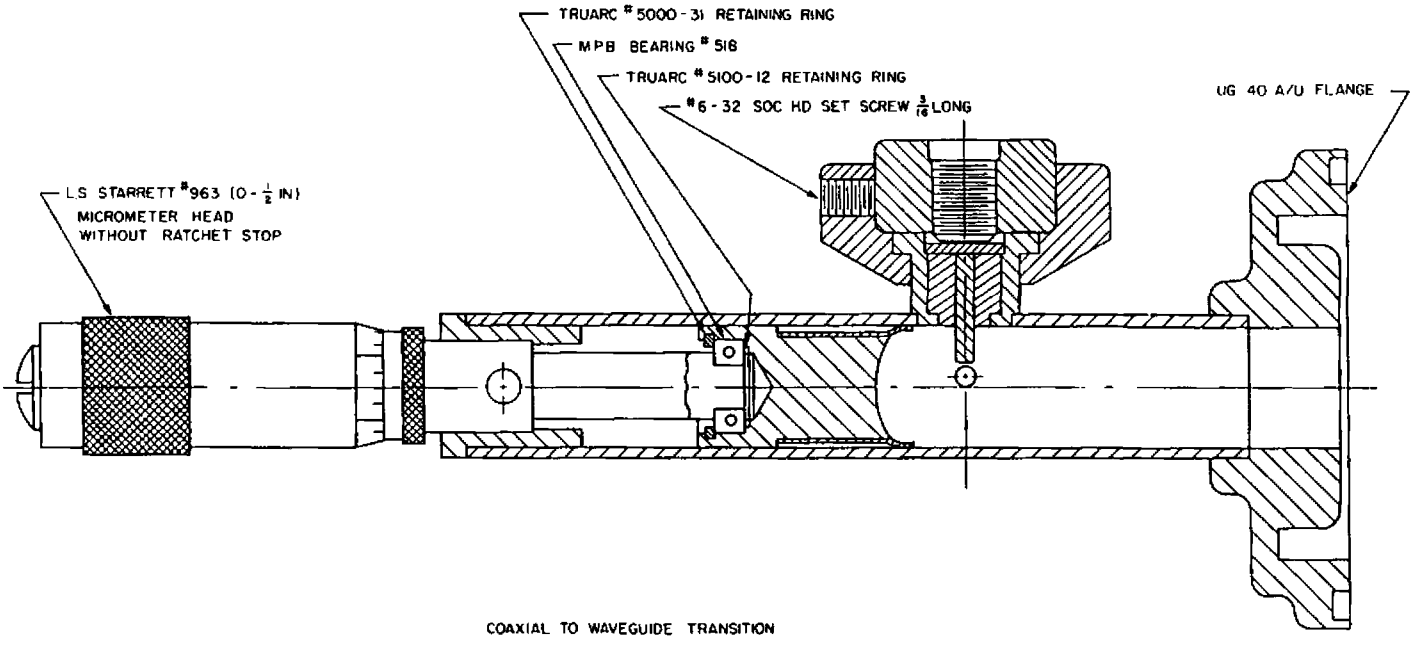

COAXIAL TO WAVEGUIDE TRANSITION

S38024