Packaged MAGNETRON for microwave heating applications, operating at a fixed frequency within the range 2425-2475 Mc/s and capable of delivering a continuous wave output power of 200 watts. The tube is designed for coupling to a 50 ohms 1/2" coaxial load transmission line and can be operated either at A.C. or at D.C. supply voltages

MAGNÉTRON avec aimant incorporé, pour applications de chauffage à ondes ultracourtes à une fréquence fixe dans la gamme 2425-2475 MHz et capable de fournir une puissance de sortie continue de 200 watts. Le tube est conçu pour couplage à une ligne de transmission coaxiale de 50 ohms 1/2" et peut fonctionner à tension d'alimentation continue ou alternative

MAGNETRON für Mikrowellenheizungszwecke zum Betrieb auf einer festen Frequenz im Bereich 2425-2475 MHz mit einer Dauerleistung von 200 W. Magnetron und Magnet bilden eine Baueinheit. Die Röhre ist geeignet zur Kopplung an eine 50 Ohm 1/2" koaxiale Übertragungsleitung und kann von Gleich- oder Wechselspeisespannung betrieben werden

Heating : indirect	V_{fo}		= 5,3 V $^{+5\,\%}_{-10\,\%}$
Chauffage: indirect	I_f (V_f = 5,3 V)		= 3,2 A
Heizung : indirekt			= max. 3,4 A
	T_w		= min. 2 min.
	R_f (cold,froid,kalt)		= 0,35 Ω

Remark:
At I_a > 120 mA it is necessary to reduce V_f from 5.3 V to 4.5 V immediately after applying high voltage. If then becomes 2.8 A. At I_a < 120 mA V_f must not be reduced

Observation:
A I_a > 120 mA il faut réduire V_f de 5,3 V jusqu'à 4,5 V immédiatement après l'application de la haute tension. I_f devient alors 2,8 A. A I_a < 120 mA V_f ne sera pas réduit

Bemerkung:
Bei I_a > 120 mA muss V_f sofort nach dem Einschalten der Hochspannung reduziert werden auf 4,5 V. I_f wird dann 2,8 A. Bei I_a < 120 mA muss V_f nicht reduziert werden

Limiting values (absolute values)
Caractéristiques limites (valeurs absolues)
Grenzdaten (absolute Werte)

Each limiting value should be regarded independently of other values, so that under no circumstances it is permitted to exceed a limiting value whichsoever
Chaque valeur limite doit être considérée indépendamment des autres valeurs, de sorte qu'en aucun cas il est permis de dépasser une valeur limite quelconque
Jeder Grenzwert gilt unabhängig von anderen Werten, sodass er unter keinen Umständen überschritten werden darf

V_{fo}	= max. 5,6 V	W_{ia}	= max. 370 W
I_{fsurge}	= max. 6,0 A	V.S.W.R.	= max. 2
I_a	= max. 220 mA[1])	t_a	= max. 125 °C

[1]) See page 2; voir page 2; siehe Seite 2

Packaged MAGNETRON for low-power microwave heating applications, operating at a fixed frequency within the range of 2425 to 2475 Mc/s and capable of delivering a continuous wave output power of approximately 200 watts. The tube has been designed for coupling to a 50 ohms 1/2" coaxial line and can be operated at A.C., at unfiltered rectified A.C. or at D.C. anode voltage

CATHODE: oxide coated

→ HEATING:

Indirect by A.C. or D.C.

Heater starting voltage	V_{f_o}	= 5.3 V $^{+5}_{-10}$ %
Heater current at 5.3 V	$I_f(V_f=5.3\ V)$	= 3.5 A
Cold heater resistance	$R_f(cold)$	= 0.2 Ω

Before application of the high voltage, the cathode must be heated for at least 3 minutes
For reduction of the heater voltage as a function of the anode current see page C

→ TYPICAL CHARACTERISTICS

Anode current	I_a	= 200 mA
Voltage standing wave ratio	V.S.W.R.	< 1.05
Anode voltage (filtered D.C. voltage)	V_a	= 1.65 $^{+0.05}_{-0.1}$ kV

COOLING

The tube does not require any extra cooling, provided it is effectively mounted on a heat-conducting non-magnetic chassis plate (sink cooling). To obtain an effective natural cooling of the tube, a vertical position of the chassis plate can be advantageous

STORAGE, HANDLING

In storage a minimum distance of 15 cm should be maintained between the magnetrons to prevent a decrease of the field strength of the magnet due to interaction with adjacent magnets
Magnetic materials should be kept away from the magnet a distance of at least 5 cm
During installation non-magnetic tools should be used

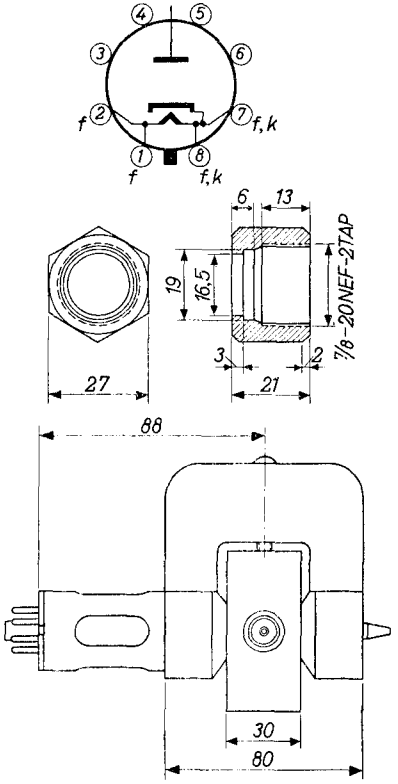

[1]) With A.C. anode supply or with anode voltage from single-phase full-wave rectifier without filter
Avec tension d'alimentation alternative ou avec tension anodique dérivée d'un redresseur monophasé à deux alternances sans filtre
Mit Anodenwechselspeisespannung oder mit Anodenspannung von einem Einphasen-Doppelweggleichrichter ohne Filter

COAXIAL LINE

Example of 50 ohms 1/2 inch coaxial line

The inner conductor should be sufficiently flexible

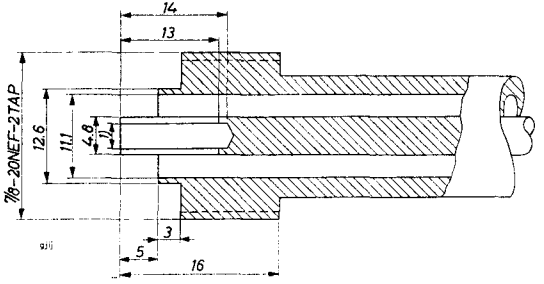

Dimensions in mm

[1]) Hole 3.85 - 0.05 mm with 2 to 4 slots, wide 0.2 mm The wall segments should be pressed together

Net weight 2.4 kg

Shipping weight 3.5 kg

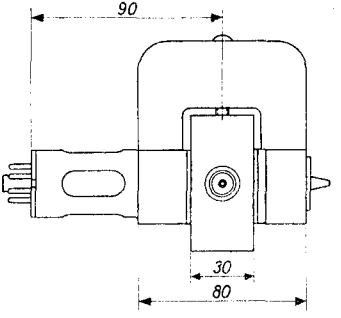

Dimensions in mm

Mounting position: any

Base Octal

Socket 5903/13

The socket should not be rigidly mounted. It should have flexible leads and be allowed to move freely

Dimensions in mm
Dimensions en mm
Abmessungen in mm

Base
Culot Octal
Sockel

Socket
Support 5903/13
Fassung

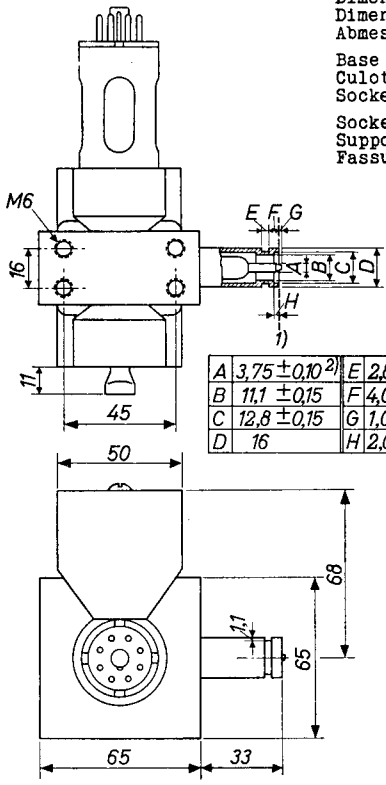

A	3,75 ±0,10 2)	E	2,8±0,2
B	11,1 ±0,15	F	4,0±0,2
C	12,8 ±0,15	G	1,0±1,5
D	16	H	2,0±0,15

1) Reference plane
Plan de référence
Bezugsebene

2) The diameter of the eccentricity of the inner conductor is max. 1.6 mm
Le diamètre de la surface de l'excentricité du conducteur est de 1,6 mm au max.
Der Durchmesser der Exzentrizitätsfläche des inneren Leiters ist max. 1,6 mm

Dimensions in mm

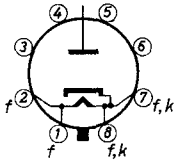

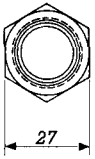

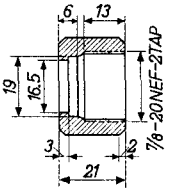

Cap nut

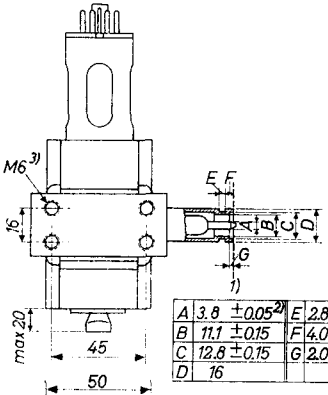

A	3.8 ±0.05 2)		E	2.8±0.2
B	11.1 ±0.15		F	4.0±0.2
C	12.8 ±0.15		G	2.0±0.15
D	16			

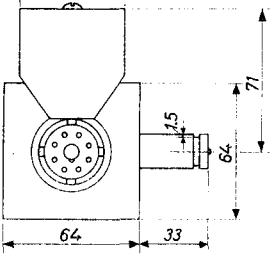

1) Reference plane

2) The diameter of the eccentricity of the inner conductor is max. 1.6 mm

3) Deep 10 mm

Mounting position: any
Montage : arbitrairement
Einbau : willkürlich

Net weight		Shipping weight	
Poids net	2,4 kg	Poids brut	3,5 kg
Nettogewicht		Bruttogewicht	

Operating characteristics with A.C. anode supply or with anode voltage from single-phase full-wave rectifier without filter
Caractéristiques d'utilisation avec tension d'alimentation alternative ou avec tension anodique dérivée d'un redresseur monophasé à deux alternances sans filtre
Betriebsdaten mit Anodenwechselspeisespannung oder mit Anodenspannung von einem Einphasen-Doppelweggleichrichter ohne Filter

f	=	2425 - 2475 Mc/s
V_f	=	4,5 V [2])
I_a	=	200 mA
V_a	=	1600 ± 100 V [3])
W_o	=	200 W

Coupling: standard 1/2" coaxial line of 50 Ω
Couplage: câble standardisé de 1/2" 50 Ω
Kopplung: standardisierte 1/2" 50 Ω Koaxialleitung

Cooling: The tube does not require any extra cooling, provided it is mounted effectively on a heat-conducting chassis plate (sink-cooling). To obtain an effective natural cooling, a vertical position of the chassis plate can be advantageous
Refroidissement: Le tube ne demande pas un refroidissement additionnel, pourvu qu'il soit monté d'une manière effective à une plaque de chassis conduisant la chaleur. Afin d'obtenir un refroidissement naturel efficace, une position verticale de la plaque de chassis peut être avantageuse
Kühlung: Die Röhre erfordert keine zusätzliche Kühlung, wenn sie nur auf einer wärmeleitenden Chassisplatte montiert ist. Zur Erhaltung einer guten natürlichen Kühlung kann eine senkrechte Stellung der Chassisplatte vorteilhaft sein

---

[2]) See "Remark" page 1
Voir "Observation" page 1
Siehe "Bemerkung" Seite 1

[3]) R.M.S. value of alternating voltage or D.C. value of pulsating voltage
Valeur efficace de tension alternative ou composante continue de tension pulsatoire
Effektivwert der Wechselspannung oder Gleichspannungsanteil der pulsierenden Spannung

→ I. A.C. ANODE SUPPLY (See page A, curves A,B and C)

Limiting values (Absolute limits)

Heater starting voltage	V_{f_o}	= max.	5.6 V
Heater surge current	$I_{f\ surge}$	= max.	8.5 A
Anode current	I_a	= max.	230 mA [1]
Anode peak current	I_{a_p}	= max.	1.4 A
Voltage standing wave ratio	V.S.W.R.	= max.	2.0
Temperature of any part of envelope	t	= max.	125 °C

Operating characteristics

Fixed frequency	f = between 2425 and 2475 Mc/s		
Heater voltage	V_f	=	4.5 V $^{+5\ \%}_{-10\ \%}$ [2]
Anode current	I_a	=	200 mA [1]
Anode peak current	I_{a_p}	=	1.3 A
Anode voltage	V_a	=	1.65 kV [3][4]
Output power	W_o	=	200 W [4]

→ II. ANODE SUPPLY FROM SINGLE-PHASE FULL-WAVE RECTIFIER WITHOUT FILTER (See page A, curves A,B and C)

Limiting values (Absolute limits)

Heater starting voltage	V_{f_o}	= max.	5.6 V
Heater surge current	$I_{f\ surge}$	= max.	8.5 A
Anode current	I_a	= max.	230 mA [1]
Anode peak current	I_{a_p}	= max.	0.8 A
Voltage standing wave ratio	V.S.W.R.	= max.	2.0
Temperature of any part of envelope	t	= max.	125 °C

Operating characteristics

Fixed frequency	f = between 2425 and 2475 Mc/s		
Heater voltage	V_f	=	4.5 V $^{+5\ \%}_{-10\ \%}$ [2]
Anode current	I_a	=	200 mA [1]
Anode peak current	I_{a_p}	=	0.7 A
Anode voltage	V_a	=	1.65 kV [3][4]
Output power	W_o	=	200 W [4]

[1][2][3][4] See page 5

Remarks: In storage a minimum distance of 15 cm should be maintained between the magnetrons. Magnetic materials should be kept away from the magnet a distance of at least 5 cm. During installation non-magnetic tools should be used

Observations: Pendant l'emmagasinage il faut maintenir une distance de 15 cm au min. entre les magnétrons. Des matériaux magnétiques doivent être éloignés de l'aimant d'une distance de 5 cm au moins. Pendant l'installation il est nécessaire d'utiliser des outils non-magnétiques

Bemerkungen: Die Magnetrons dürfen nur mit einem gegenseitigen Abstand von mindestens 15 cm gelagert werden. Magnetische Werkstoffe müssen mindestens 5 cm vom Magnet entfernt bleiben. Bei der Montage müssen nicht-magnetische Werkzeuge verwendet werden

→ III. FILTERED D.C. ANODE SUPPLY (Page A, curves D,E and F)

With fixed reflection element between the magnetron and the load with the following approximate characteristics:

Voltage standing wave ratio = 2.0

Phase position = 0.45λ (phase of sink region)

Limiting values (Absolute limits)

Heater starting voltage	V_{f_o}	= max.	5.6 V
Heater surge current	$I_{f\ surge}$	= max.	8.5 A
Anode current	I_a	= max.	125 mA[1]
Voltage standing wave ratio	V.S.W.R.	= max.	3.0
Temperature of any part of envelope	t	= max.	125 °C

Operating characteristics

Fixed frequency	f	= between 2425 and 2475 Mc/s	
Heater voltage	V_f	=	4.8 V $^{+5\ \%}_{-10\ \%}$ [2]
Anode current	I_a	=	100 mA[1]
Anode voltage	V_a	=	1.65 kV[4]
Output power	W_o	=	100 W [4]

[1]) Measured with a moving coil instrument

[2]) The heater voltage must be reduced from 5.3 V to the indicated value immediately after switching on the high voltage when the magnetron starts oscillating

[3]) Measured with filtered D.C. anode supply

[4]) At matched load

PHILIPS 7090

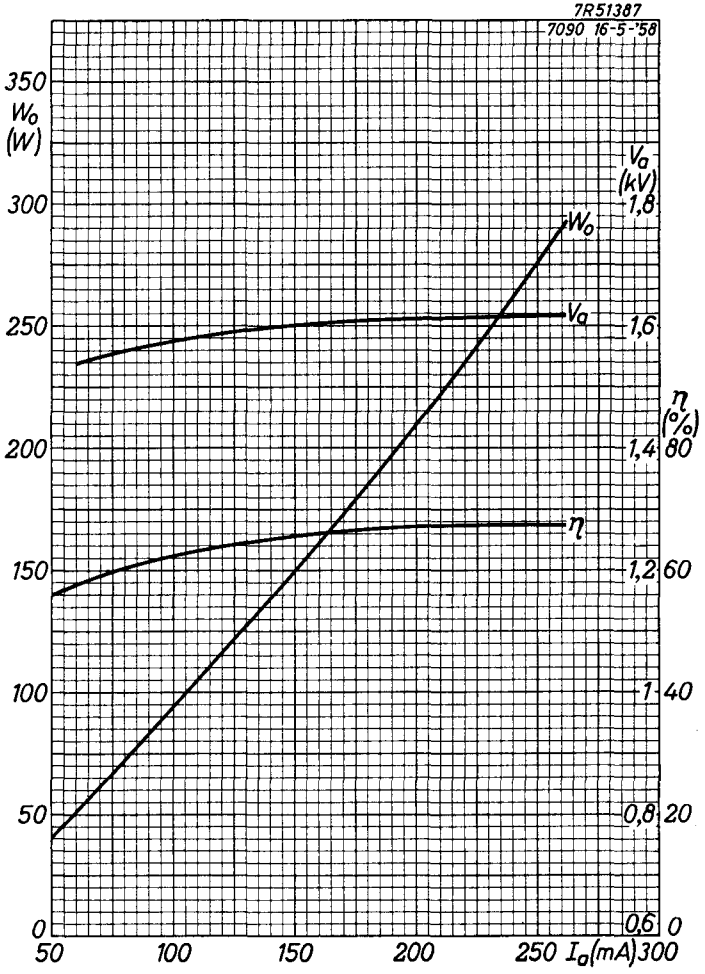

6.6.1958

A

PHILIPS

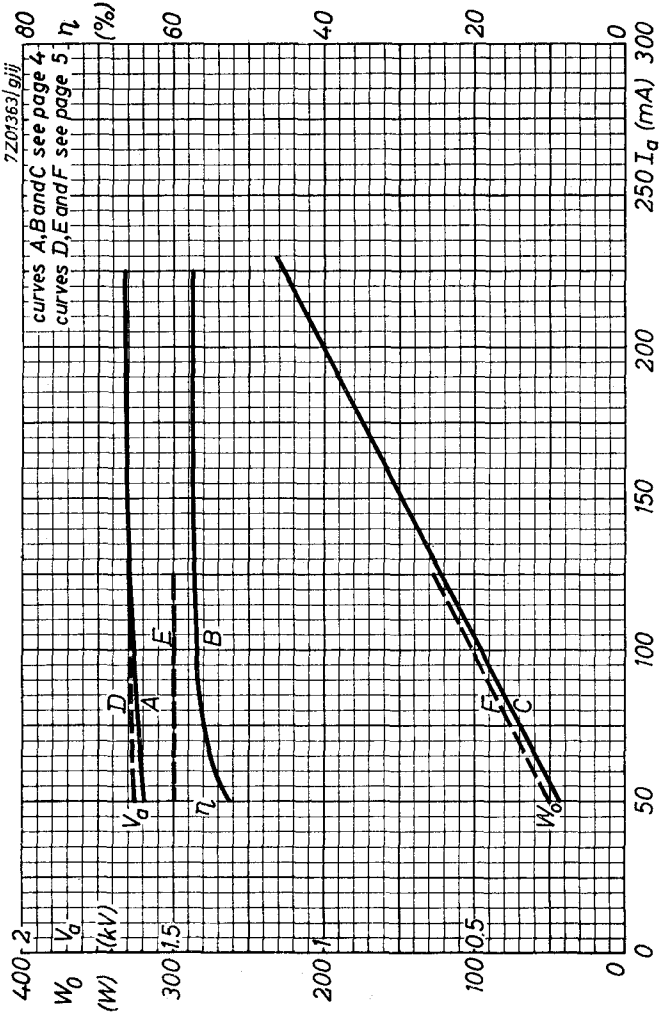
7Z01363/gjj
curves A, B and C see page 4
curves D, E and F see page 5
W_o (W)
V_a (kV)
η (%)
I_a (mA)
400
300
200
100
0
2
1.5
1
0.5
0
80
60
40
20
0
50
100
150
200
250
300
V_a
η
W_o
A
B
C
D
E
F

PHILIPS

7R51388
7090 17-5-'58

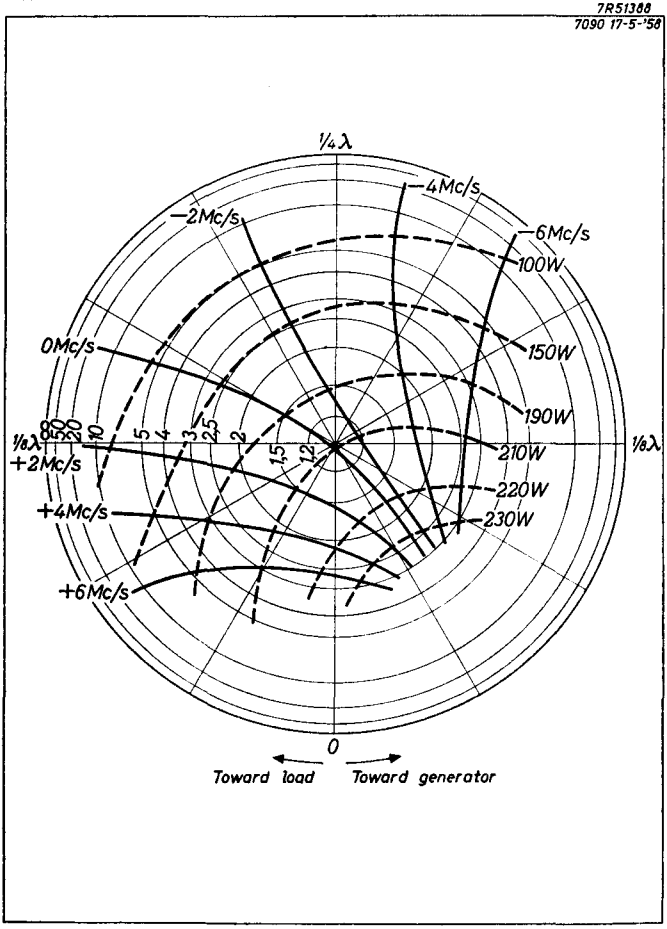

B

LOAD DIAGRAM

Measured with A.C. anode supply

Anode current	I_a	= 0.2 A
Peak anode current	I_{a_p}	= 1.3 A
Frequency	f_o	= 2450 Mc/s

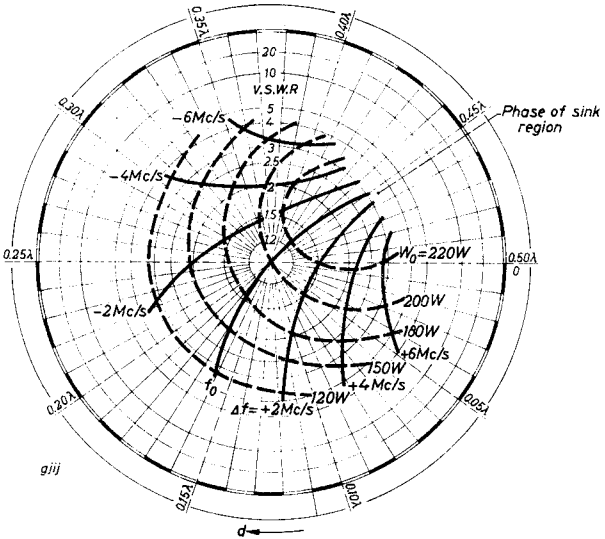

d = distance of standing wave minimum from reference plane toward load.

For reference plane see page 3

7Z01364/gjj

The heater voltage should be adjusted according to curve a or b for A.C. anode voltage and for unfiltered single-phase full-wave rectified anode voltage and according to curve c for filtered D.C. anode voltage

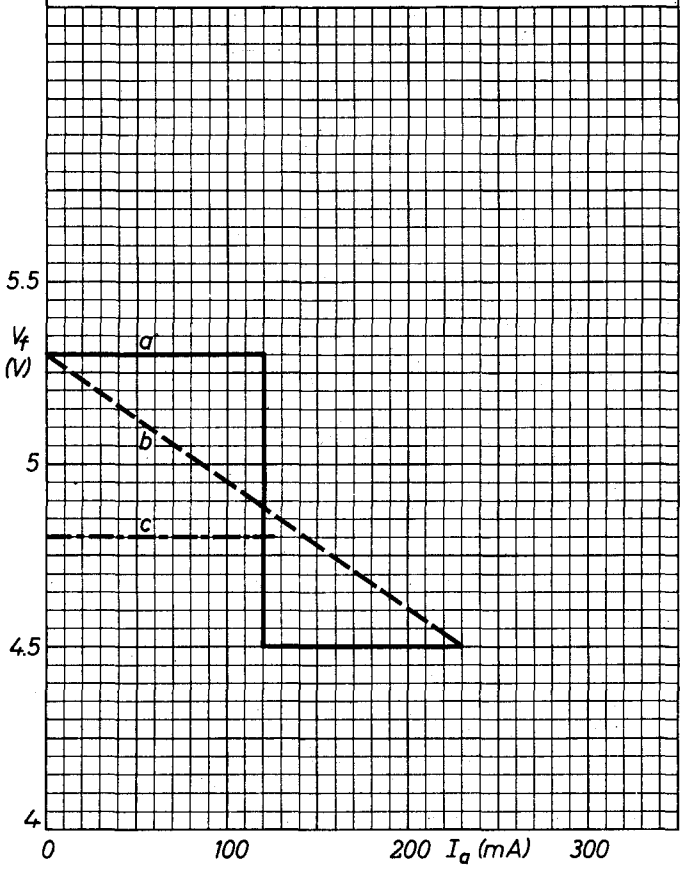

PHILIPS

Electronic Tube HANDBOOK

7090

page	sheet	date
1	1	1958.06.06
2	1	1962.07.07
3	2	1958.06.06
4	2	1962.07.07
5	3	1958.06.06
6	3	1962.07.07
7	4	1958.06.06
8	4	1962.07.07
9	5	1958.06.06
10	5	1962.07.07
11	A	1958.06.06
12	A	1962.07.07
13	B	1958.06.06
14	B	1962.07.07
15	C	1962.07.07
16	FP	1999.12.30