This bulletin also applies to RCA-7035/4X150D which is identical with RCA-7034/4X150A except for its heater rating of 26.5 ± 10% volts, 0.58 ampere.

7035/4X150D

7034/4X150A

BEAM POWER TUBE

Unipotential Cathode
Coaxial-Electrode Structure
Compact Design

For Use at Frequencies Up to 500 Mc
Forced-Air Cooled
370 Watts CW Output up to 150 Mc
140 Watts CW Output at 500 Mc

2-15/32" Max. Length
1.635" Max. Diameter
Integral Radiator

RCA-7034/4X150A is a very small and compact, forced-air-cooled beam power tube designed for service at frequencies up to 500 Mc. It is useful as an af power amplifier and modulator, a wide-band amplifier in video applications, a linear rf power amplifier in single-sideband suppressed-carrier equipment, and a class C amplifier or oscillator. The maximum plate dissipation of the 7034 is 250 watts.

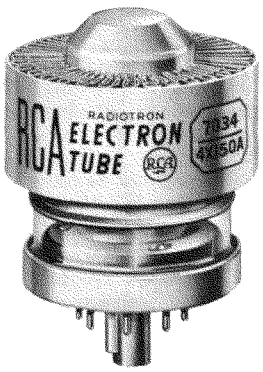

The 7034 is unilaterally interchangeable with the 4X150A. At frequencies up to 150 Mc, it offers substantially higher power-output capability than the 4X150A because of its higher plate-voltage rating. Furthermore, the specially designed, high-efficiency louvered radiator which is hard soldered directly to the plate of the 7034 for better heat transfer, makes possible the maximum plate-dissipation rating of 250 watts with no sacrifice in tube reliability.

The terminal arrangement of the 7034 facilitates use of the tube with tank circuits of the coaxial type. Effective isolation of the output circuit from the input circuit is provided at the higher frequencies by the ring terminal for grid No.2. A base-pin termination for grid No.2 is also available for operation of the 7034 at the lower frequencies.

GENERAL DATA

Electrical:

Heater, for Unipotential Cathode:		
Voltage (AC or DC)§	6.0 ± 10%	volts
Current at 6.0 volts	2.6	amperes
Minimum heating time	30	seconds
Mu-Factor, Grid No.2 to Grid No.1, for grid-No.2 volts = 300 and grid-No.2 ma. = 50	5	
Direct Interelectrode Capacitances:□		
Grid No.1 to plate	0.03	μμf
Grid No.1 to cathode, grid No.2, and heater	16	μμf
Plate to cathode, grid No.2, and heater	4.4	μμf

Mechanical:

Operating Position	Any
Maximum Overall Length	2-15/32"
Maximum Seated Length	1.850"
Maximum Diameter	1.640"
Base	Special 8-Pin
Socket	Air-System Socket, such as Johnson No.124-110-1■ (Supplied with Air Chimney)
Radiator	Integral part of tube

Air Flow:

Through Indicated Air-System Socket--This fitting directs the air over the base seals; past the grid-No.2 seal, glass envelope, and plate seal; and through the radiator to provide effective cooling with minimum air flow. When the tube is operated at maximum plate dissipation for each class of service, a minimum air flow of 5.6 cfm through the system is required. The corresponding pressure drop is 0.45 inch of water. These requirements are for operation at sea level and at an ambient temperature of 20° C. At higher altitudes and ambient temperatures, the air flow must be increased to maintain the respective seal temperatures and the plate temperature within maximum ratings.

Without Air-System Socket--If an air-system socket is not used, it is essential that adequate cooling air be directed over the base seals, past the envelope, and through the radiator. Under these conditions and with the tube operating at maximum plate dissipation for each class of service, a minimum air flow of 5.3 cfm must pass through the radiator. The corresponding pressure drop is 0.28 inch of water. These requirements are for operation at sea level and at an ambient temperature of 20° C. At higher altitudes and ambient temperatures, the air flow must be increased to maintain the respective seal temperatures and the plate temperature within maximum ratings.

Plate Temperature (Measured on base end of plate surface at junction with fins)	250 max.	°C
Temperature of Plate Seal	200 max.	°C
Temperature of Base Seals and Grid-No.2 Seal	175 max.	°C
Weight (Approx.)	4	ounces

AF POWER AMPLIFIER & MODULATOR - Class AB_1♦

Maximum CCS● Ratings, *Absolute-Maximum Values:*★

DC PLATE VOLTAGE	2000 max.	volts
DC GRID-No.2 (SCREEN) VOLTAGE	400 max.	volts
MAX.-SIGNAL DC PLATE CURRENT*	250 max.	ma
PLATE DISSIPATION*	250 max.	watts
GRID-No.2 DISSIPATION*	12 max.	watts
PEAK HEATER-CATHODE VOLTAGE:		
Heater negative with respect to cathode	150 max.	volts
Heater positive with respect to cathode	150 max.	volts

■ Available from E. F. Johnson Co., Waseca, Minn.

Trademark(s) ® Registered
Marca(s) Registrada(s)

Typical CCS Operation:

Values are for 2 tubes

DC Plate Voltage	800	1000	1500	2000	volts
DC Grid-No.2 Voltage	300	300	300	300	volts
DC Grid-No.1 (Control-Grid) Voltage	-40	-43	-50	-50	volts
Peak AF Grid-No.1-to-Grid-No.1 Voltage	80	86	100	100	volts
Zero-Signal DC Plate Current	210	165	100	100	ma
Max.-Signal DC Plate Current	435	450	456	470	ma
Zero-Signal DC Grid-No.2 Current	0	0	0	0	ma
Max.-Signal DC Grid-No.2 Current	76	52	42	36	ma
Effective Load Resistance (Plate to plate)	4400	4250	6570	8760	ohms
Max.-Signal Driving Power (Approx.)	0	0	0	0	watts
Max.-Signal Power Output (Approx.)	170	230	400	580	watts

Maximum Circuit Values:

Grid-No.1-Circuit Resistance (Per tube) . . . 0.1 max. megohm

AF POWER AMPLIFIER & MODULATOR - Class AB_2#

Maximum CCS● Ratings, *Absolute-Maximum Values:*★

DC PLATE VOLTAGE	2000 max.	volts
DC GRID-No.2 (SCREEN) VOLTAGE	400 max.	volts
MAX.-SIGNAL DC PLATE CURRENT*	250 max.	ma
PLATE DISSIPATION*	250 max.	watts
GRID-No.2 DISSIPATION*	12 max.	watts
GRID-No.1 (CONTROL-GRID) DISSIPATION	2 max.	watts
PEAK HEATER-CATHODE VOLTAGE:		
Heater negative with respect to cathode	150 max.	volts
Heater positive with respect to cathode	150 max.	volts

Typical CCS Operation:

Values are for 2 tubes

DC Plate Voltage	800	1000	1500	2000	volts
DC Grid-No.2 Voltage	300	300	300	300	volts
DC Grid-No.1 Voltage	-40	-45	-50	-50	volts
Peak AF Grid-No.1-to-Grid-No.1 Voltage	90	98	106	106	volts
Zero-Signal DC Plate Current	210	166	100	100	ma
Max.-Signal DC Plate Current	500	493	500	500	ma
Zero-Signal DC Grid-No.2 Current	0	0	0	0	ma
Max.-Signal DC Grid-No.2 Current	80	58	46	36	ma
Effective Load Resistance (Plate to plate)	3140	3950	5970	8100	ohms
Max.-Signal Driving Power (Approx.)	0.15	0.15	0.2	0.2	watt
Max.-Signal Power Output (Approx.)	215	270	440	630	watts

RF POWER AMPLIFIER - Class B Television Service

Synchronizing-level conditions per tube unless otherwise specified

Maximum CCS● Ratings, *Absolute-Maximum Values:*★

	54 to 216 Mc	
DC PLATE VOLTAGE	1250 max.	volts
DC GRID-No.2 (SCREEN) VOLTAGE	400 max.	volts
DC GRID-No.1 (CONTROL-GRID) VOLTAGE	-250 max.	volts
DC PLATE CURRENT (AVERAGE)⊕	250 max.	ma
PLATE DISSIPATION	250 max.	watts
GRID-No.2 DISSIPATION	12 max.	watts
GRID-No.1 DISSIPATION	2 max.	watts
PEAK HEATER-CATHODE VOLTAGE:		
Heater negative with respect to cathode	150 max.	volts
Heater positive with respect to cathode	150 max.	volts

Typical CCS Operation (With bandwidth of 5 Mc):

DC Plate Voltage	750	1000	1250	volts
DC Grid-No.2 Voltage	300	300	300	volts
DC Grid-No.1 Voltage	-60	-65	-70	volts
Peak RF Grid-No.1 Voltage:				
Synchronizing level	85	95	100	volts
Pedestal level	65	70	75	volts
DC Plate Current:				
Synchronizing level	335	330	305	ma
Pedestal level	245	240	230	ma
DC Grid-No.2 Current:				
Synchronizing level	50	45	45	ma
Pedestal level	20	15	10	ma
DC Grid-No.1 Current:				
Synchronizing level	15	20	25	ma
Pedestal level	4	4	4	ma
Driver Power Output (Approx.):♦				
Synchronizing level	7	8	9	watts
Pedestal level	4.25	4.7	5.5	watts
Useful Power Output (Approx.):				
Synchronizing level	135	200	250	watts
Pedestal level	75	110	140	watts

LINEAR RF POWER AMPLIFIER - Single-Sideband Suppressed-Carrier Service

Maximum Ratings, *Absolute-Maximum Values:*★

	Up to 150 Mc		*Up to 500 Mc*	
	CCS●	*ICAS●●*	*CCS●*	
DC PLATE VOLTAGE	2000 max.	2250 max.	1250 max.	volts
DC GRID-No.2 (SCREEN) VOLTAGE	400 max.	400 max.	400 max.	volts
MAX.-SIGNAL DC PLATE CURRENT	250 max.	280 max.	250 max.	ma
PLATE DISSIPATION	250 max.	300 max.	250 max.	watts
GRID-No.2 DISSIPATION	12 max.	12 max.	12 max.	watts
PEAK HEATER-CATHODE VOLTAGE:				
Heater negative with respect to cathode	150 max.	150 max.	150 max.	volts
Heater positive with respect to cathode	150 max.	150 max.	150 max.	volts

Typical Class AB_1 "Single-Tone" Operation up to 150 Mc:♦♦

	CCS●			*ICAS●●*	
DC Plate Voltage	1000	1500	1800	2000	volts
DC Grid-No.2 Voltage‡	300	300	300	300	volts
DC Grid-No.1 (Control-Grid) Voltage	-50	-50	-50	-48	volts
Zero-Signal DC Plate Current	50	50	50	60	ma
Zero-Signal DC Grid-No.2 Current	0	0	0	0	ma
Effective RF Load Resistance	1860	3280	4140	4270	ohms
Max.-Signal DC Plate Current	225	225	225	250	ma
Max.-Signal DC Grid-No.2 Current	11	11	11	9	ma
Max.-Signal Peak RF Grid-No.1 Voltage	50	50	50	48	volts
Max.-Signal Driving Power (Approx.)	0	0	0	0	watts
Max.-Signal Power Output (Approx.)	115	200	250	290	watts

Maximum Circuit Values:

Grid-No.1-Circuit Resistance under Any Condition:

With fixed bias . . . 25000 max. ohms

With cathode bias . . . Not recommended

PLATE-MODULATED RF POWER AMP. - Class C Telephony

Carrier conditions per tube for use with a max. modulation factor of 1.0

Maximum CCS● Ratings, *Absolute-Maximum Values:*★

	Up to 150 Mc	*150 to 500 Mc*	
DC PLATE VOLTAGE	1600 max.	1000 max.	volts
DC GRID-No.2 (SCREEN) VOLTAGE	300 max.	300 max.	volts
DC GRID-No.1 (CONTROL-GRID) VOLTAGE	-250 max.	-250 max.	volts
DC PLATE CURRENT	200 max.	200 max.	ma
PLATE DISSIPATION	165 max.	165 max.	watts
GRID-No.2 DISSIPATION	10 max.	10 max.	watts
GRID-No.1 DISSIPATION	2 max.	2 max.	watts
PEAK HEATER-CATHODE VOLTAGE:			
Heater negative with respect to cathode	150 max.	150 max.	volts
Heater positive with respect to cathode	150 max.	150 max.	volts

Typical CCS Operation at Frequencies up to 150 Mc:

DC Plate Voltage	1200	1600	volts
DC Grid-No.2 Voltage (Modulated approx. 55%)▲	250	250	volts
DC Grid-No.1 Voltage★★	-118	-118	volts
Peak AF Grid-No.2 Voltage (For 100% modulation)	180	200	volts
Peak RF Grid-No.1 Voltage	136	136	volts
DC Plate Current	200	200	ma
DC Grid-No.2 Current	23	23	ma
DC Grid-No.1 Current (Approx.)	5	5	ma
Driving Power (Approx.)	2	3	watts
Power Output (Approx.)	160	230	watts

Typical CCS Operation at 165 Mc:

DC Plate Voltage	400	600	800	1000	volts
DC Grid-No.2 Voltage (Modulated approx. 55%)▲	250	250	250	250	volts
DC Grid-No.1 Voltage	-90	-95	-100	-105	volts
Peak AF Grid-No.2 Voltage (For 100% modulation)	140	150	160	170	volts
Peak RF Grid-No.1 Voltage	110	120	120	125	volts
DC Plate Current	200	200	200	200	ma
DC Grid-No.2 Current	40	35	25	20	ma
DC Grid-No.1 Current (Approx.)	7	8	10	15	ma
Driving Power (Approx.)	1	1	1.5	2	watts
Power Output (Approx.)	55	80	100	140	watts

Maximum Circuit Values:

Grid-No.1-Circuit Resistance under Any Condition	25000 max.	ohms

RF POWER AMPLIFIER & OSC. — Class C Telegraphy† and RF POWER AMPLIFIER — Class C FM Telephony

Maximum CCS● Ratings, *Absolute-Maximum Values:*★

	Up to 150 Mc	*150 to 500 Mc*	
DC PLATE VOLTAGE	2000 max.	1250 max.	volts
DC GRID-No.2 (SCREEN) VOLTAGE	300 max.	300 max.	volts
DC GRID-No.1 (CONTROL-GRID) VOLTAGE	-250 max.	-250 max.	volts
DC PLATE CURRENT	250 max.	250 max.	ma
PLATE DISSIPATION	250 max.	250 max.	watts
GRID-No.2 DISSIPATION	12 max.	12 max.	watts
GRID-No.1 DISSIPATION	2 max.	2 max.	watts
PEAK HEATER-CATHODE VOLTAGE:			
Heater negative with respect to cathode	150 max.	150 max.	volts
Heater positive with respect to cathode	150 max.	150 max.	volts

Typical CCS Operation at Frequencies up to 150 Mc:

DC Plate Voltage	1500	2000	volts
DC Grid-No.2 Voltage	250	250	volts
DC Grid-No.1 Voltage	-88	-88	volts
Peak RF Grid-No.1 Voltage	110	110	volts
DC Plate Current	250	250	ma
DC Grid-No.2 Current	24	24	ma
DC Grid-No.1 Current (Approx.)	8	8	ma
Driving Power (Approx.)	1.5	2.5	watts
Power Output (Approx.)	260	370	watts

Typical CCS Operation at 165 Mc:

DC Plate Voltage	600	750	1000	1250	volts
DC Grid-No.2 Voltage	250	250	250	250	volts
DC Grid-No.1 Voltage	-75	-80	-80	-90	volts
Peak RF Grid-No.1 Voltage	91	96	95	106	volts
DC Plate Current	200	200	200	200	ma
DC Grid-No.2 Current	37	37	31	20	ma
DC Grid-No.1 Current (Approx.)	11	11	10	11	ma
Driving Power (Approx.)	1	1	1	1.2	watts
Power Output (Approx.)	85	110	150	195	watts

Typical CCS Operation at Frequency of 500 Mc with Coaxial Cavity:

DC Plate Voltage	600	800	1000	1250	volts
DC Grid-No.2 Voltage	250	250	250	280	volts
DC Grid-No.1 Voltage	-110	-110	-110	-115	volts
DC Plate Current	170	200	200	200	ma
DC Grid-No.2 Current	6	7	7	5	ma
DC Grid-No.1 Current (Approx.)	6	10	10	10	ma
Driver Power Output (Approx.)♦	15	20	25	30	watts
Useful Power Output (Approx.)	50	95	120	140	watts

Maximum Circuit Values:

Grid-No.1-Circuit Resistance under Any Condition	25000 max.	ohms

CHARACTERISTICS RANGE VALUES FOR EQUIPMENT DESIGN

	Note	*Min.*	*Max.*	
Heater Current:				
Type 7034	1	2.3	2.9	amp
Type 7035	2	0.50	0.62	amp
Direct Interelectrode Capacitances:□				
Grid No.1 to plate	–	–	0.05	μμf
Grid No.1 to cathode, grid No.2, and heater	–	14.5	17.0	μμf
Plate to cathode, grid No.2, and heater	–	4.0	4.8	μμf
Grid-No.1 Voltage:				
Type 7034	1,3,4,7	-32	-46	volts
Type 7035	2,3,4,7			
Grid-No.2 Current:				
Type 7034	1,3,4,7	-5	+3	ma
Type 7035	2,3,4,7			
Power Output:				
Type 7034	4,5,7	100	–	watts
Type 7035	4,6,7			

Note 1: With 6.0 volts on heater.

Note 2: With 26.5 volts on heater.

Note 3: With dc plate voltage of 1000 volts, dc grid-No.2 voltage of 300 volts, and grid-No.1 voltage adjusted to give plate current of 150 ma.

Note 4: Heater voltage must be applied for at least 30 seconds before application of other voltages.

Note 5: With heater voltage of 5.5 volts and with dc plate voltage of 1000 volts, dc grid-No.2 voltage of 250 volts, dc grid-No.1 bias of -90 volts, dc grid-No.1 current of 20 ma maximum, grid-No.1 signal voltage adjusted to produce dc plate current of 200 ma, and a frequency of 475 Mc.

Note 6: Same as Note 5 except heater voltage is 24.5 volts.

Note 7: With Forced-Air Cooling as specified under GENERAL DATA for *Air System Socket*.

SPECIAL PERFORMANCE DATA

Interelectrode Leakage:

This test is destructive and is performed on a sample lot of tubes from each production run under the following conditions: ac heater volts = 6.6 for type 7034 or 29.1 for type 7035, no voltage on other elements, and specified forced-air cooling for *Air-System Socket*. At the end of 500 hours, with tube at 25° C, and with no voltage applied to heater, the minimum resistance between indicated electrodes as measures with a 500-volt Megger-type ohmmeter having an internal impedance of 2.5 megohms, will be:

Grid No.1 and Grid No.2	10 min.	megohms
Grid No.1 and Cathode	10 min.	megohms
Grid No.2 and Cathode	10 min.	megohms

§ Because the cathode is subjected to considerable back bombardment as the frequency is increased with resultant increase in temperature, the heater voltage should be reduced depending on operating conditions and frequency to prevent overheating the cathode and resultant short life.

□ With cylindrical shield JEDEC No.320 surrounding radiator; and with a cylindrical shield JEDEC No.321 surrounding the grid-No.2 ring terminal. Both shields are connected to ground.

♦ Subscript 1 indicates that grid-No.1 current does not flow during any part of the input cycle.

● Continuous Commercial Service.

★ The *maximum ratings* in the tabulated data are established in accordance with the following definition of the *Absolute-Maximum Rating System* for rating electron devices.

Absolute-Maximum ratings are limiting values of operating and environmental conditions applicable to any electron device of a specified type as defined by its published data, and should not be exceeded under the worst probable conditions.

The device manufacturer chooses these values to provide acceptable serviceability of the device, taking no responsibility for equipment variations, environment variations, and the effects of changes in operating conditions due to variations in device characteristics.

The equipment manufacturer should design so that initially and throughout life no absolute-maximum value for the intended service is exceeded with any device under the worst probable operating conditions with respect to supply-voltage variation, equipment component variation, equipment control adjustment, load variation, signal variation, environmental conditions, and variations in device characteristics.

* Averaged over any audio-frequency cycle of sine-wave form.

Subscript 2 indicates that grid-No.1 current flows during some part of the input cycle.

⊕ Averaged over any frame.

♦ The driver stage is required to supply tube losses and rf circuit losses. The driver stage should be designed to provide an excess of power above the indicated values to take care of variations in line voltage, in components, in initial tube characteristics, and in tube characteristics during life.

●● Intermittent Commercial and Amateur Service.

♦♦ "Single-Tone" operation refers to that class of amplifier service in which the grid-No.1 input consists of a monofrequency rf signal having constant amplitude. This signal is produced in a single-sideband suppressed-carrier system when a single audio frequency of constant amplitude is applied to the input of the system.

‡ Preferably obtained from a fixed supply.

▲ The dc grid-No.2 voltage must be modulated approximately 55% in phase with the plate modulation in order to obtain 100% modulation of the 7034. The use of a series grid-No.2 resistor or reactor may not give satisfactory performance and is therefore not recommended.

★★ Obtained from grid-No.1 resistor or from a combination of grid-No.1 resistor with either fixed supply or cathode resistor.

† Key-down conditions per tube without amplitude modulation. Amplitude modulation essentially negative may be used if the positive peak of the audio-frequency envelope does not exceed 115% of the carrier conditions.

OPERATING CONSIDERATIONS

The maximum temperatures in the tabulated data for the base seals, grid-No.2 seal, plate seal, and plate are tube ratings and are to be observed in the same manner as other tube ratings. The temperature of the respective seals and of the plate may conveniently be measured with temperature-sensitive paint such as Tempilaq. The latter is made by the Tempil Corporation, 132 W. 22nd Street, New York 11, N.Y. in the form of liquid and stick.

The *socket* for the 7034 should be of a type (such as that indicated in the tabulated data) which permits adequate air-cooling of the tube. Although the base will fit a conventional lock-in socket, the latter does not permit adequate cooling and its use is therefore not recommended.

The *plate connection* is made by a metal band or spring contacts to the cylindrical surface of the radiator. It is essential that the contact areas be kept clean to minimize rf losses especially at the higher frequencies.

The *plate circuit* should be provided with a time-delay relay which will prevent the application of plate voltage before the cathode has reached normal operating temperature.

Protective devices should be used to protect not only the plate but also grid-No.2 against overload. In order to prevent excessive plate-current flow and resultant overheating of the tube, the common ground lead of the plate circuit should be connected in series with the coil of an instantaneous overload relay. This relay should be adjusted to open the circuit breakers in the primary of the rectifier transformer at slightly higher than normal plate current.

A protective device in the grid-No.2 supply lead should remove the grid-No.2 voltage when the dc grid-No.2 current reaches a value slightly higher than normal.

The rated plate and grid-No.2 voltages of this tube are extremely dangerous to the user. Great care should be taken during the adjustment of circuits. The tube and its associated apparatus, especially all parts which may be at high potential above ground, should be housed in a protective enclosure. The protective housing should be designed with interlocks so that personnel can not possibly come in contact with any high-potential point in the electrical system. The interlock devices should function to break

the primary circuit of the high-voltage supplies when any gate or door on the protective housing is opened, and should prevent the closing of this primary circuit until the door is again locked.

Forced-air cooling of the 7034 is required as indicated under GENERAL DATA. A suitable air filter is required in the air supply. Care should be given to cleaning or replacing the filter at intervals in order that accumulated dirt will not obstruct the required flow of air through the socket and radiator.

The cooling system should be properly installed to insure safe operation of the tube under all conditions and for this reason should be electrically interconnected with the heater and plate power supplies. This arrangement is necessary to make sure that the tube is supplied with air simultaneously with electrode voltages. Air-flow interlocks which open the power transformer primaries are desirable for protecting the tube when the air flow is insufficient or ceases.

The *unipotential cathode* is connected within the tube to base pins 2, 4, 6, and 8. The corresponding socket terminals should all be used for connection to the circuit. The leads should have ample cross-section and be as short as possible to minimize cathode-lead inductance.

The cathode of the 7034 in uhf service is subjected to considerable bombardment resulting from transit-time effects. This back bombardment raises the temperature of the cathode. The magnitude of the heating caused by back bombardment is a function of the operating conditions and frequency, and must be compensated by reduction of heater input in order to prevent over-

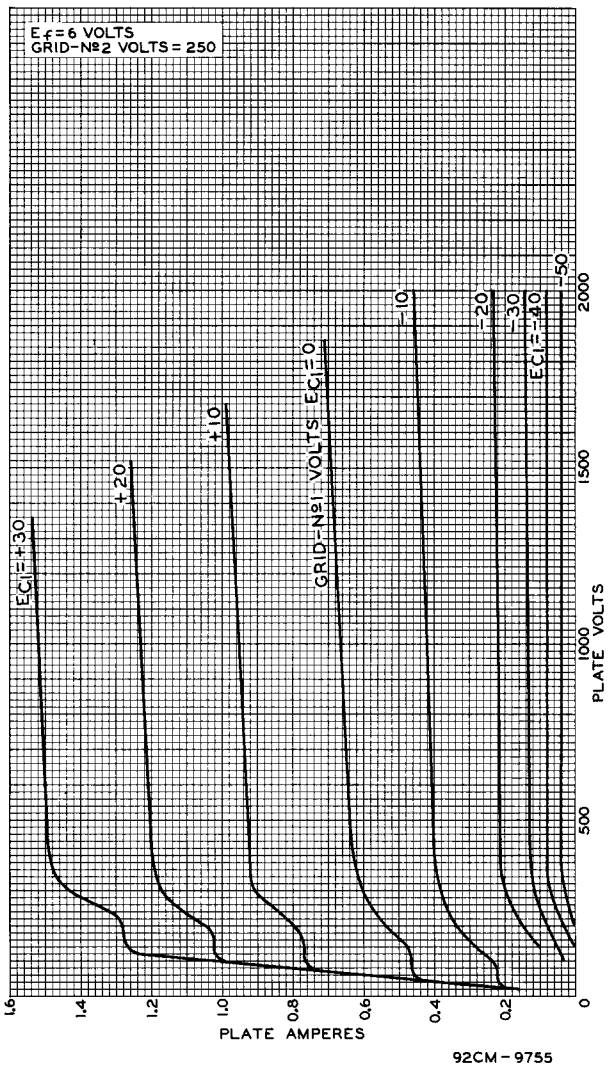

Fig. 1 - Typical Plate Characteristics of Type 7034.

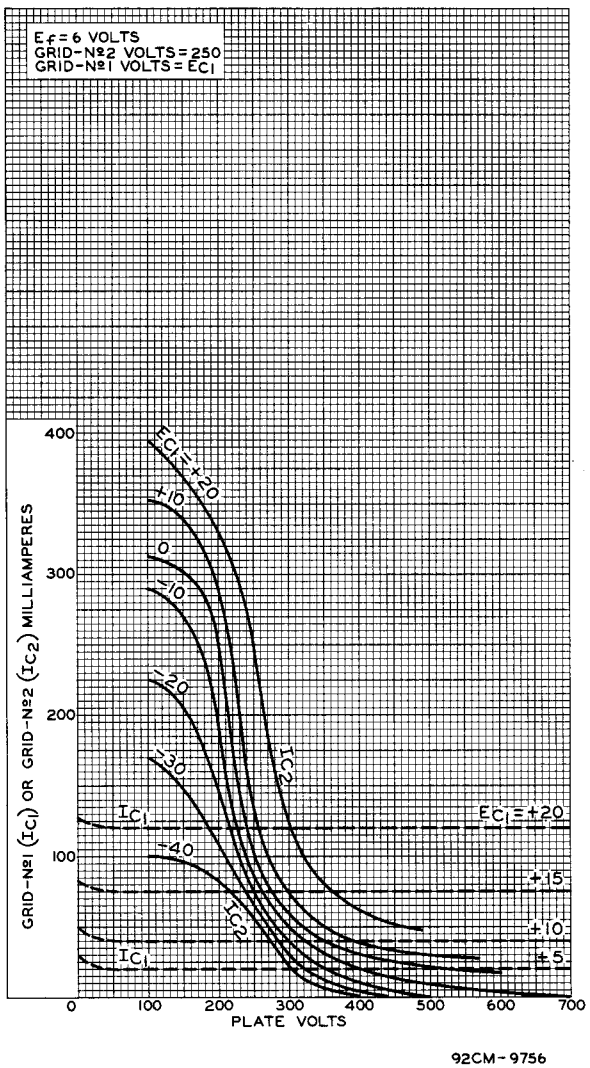

Fig. 2 - Typical Characteristics of Type 7034.

heating of the cathode and resultant short life. When long life in continuous service is desired, the 7034 should always be put in operation with full rated heater voltage (6 volts) which should than be reduced to a value depending on the operating conditions and frequency.

The proper operating value may be found by reducing the heater voltage, with normal modulation applied to the transmitter, until a reduction in output is observed. The heater voltage must then be increased by an amount equivalent to the maximum percentage regulation of the heater-voltage supply, and then further increased by about 2 per cent to allow for other variations. After the heater voltage is reduced, circuit readjustment may be necessary. It is suggested that the adjustment procedure be carried out daily. However, if no significant changes in the operating voltage are found necessary, the adjustment procedure can be scheduled less frequently. Good regulation of the heater voltage is in general economically advantageous from the viewpoint of tube life.

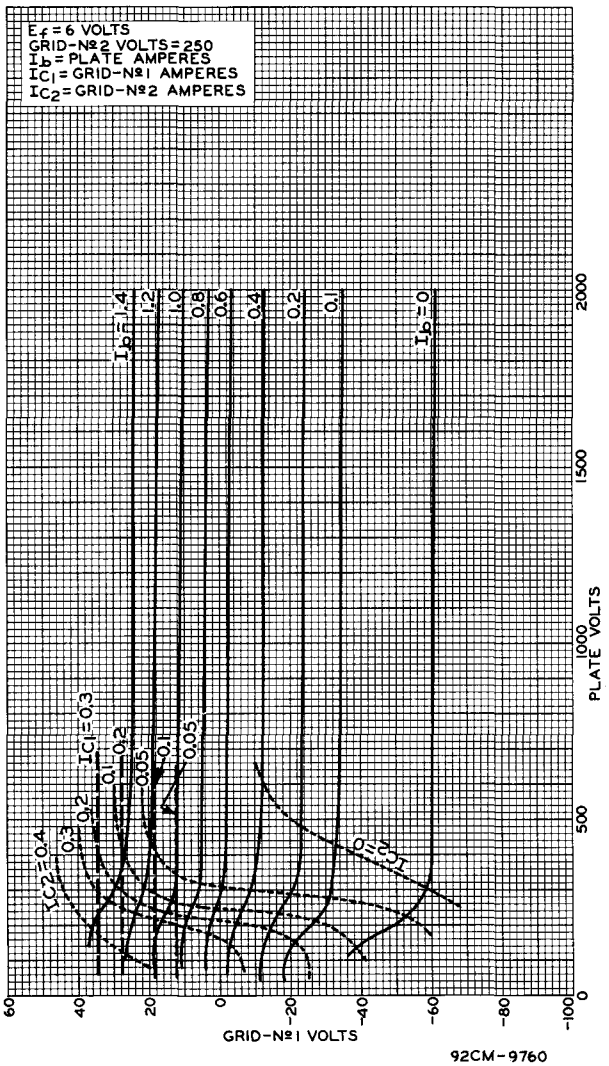

Fig. 3 - Typical Constant-Current Characteristics of Type 7034.

Grid-No. 1 of the 7034 in uhf service is subjected to heating caused not only by the normal electron bombardment as indicated by the grid-No. 1 current, but also by bombardment due to transit-time effects and by circulating rf currents. For these reasons, more than ordinary care must be taken during operation to prevent overloading grid-No. 1.

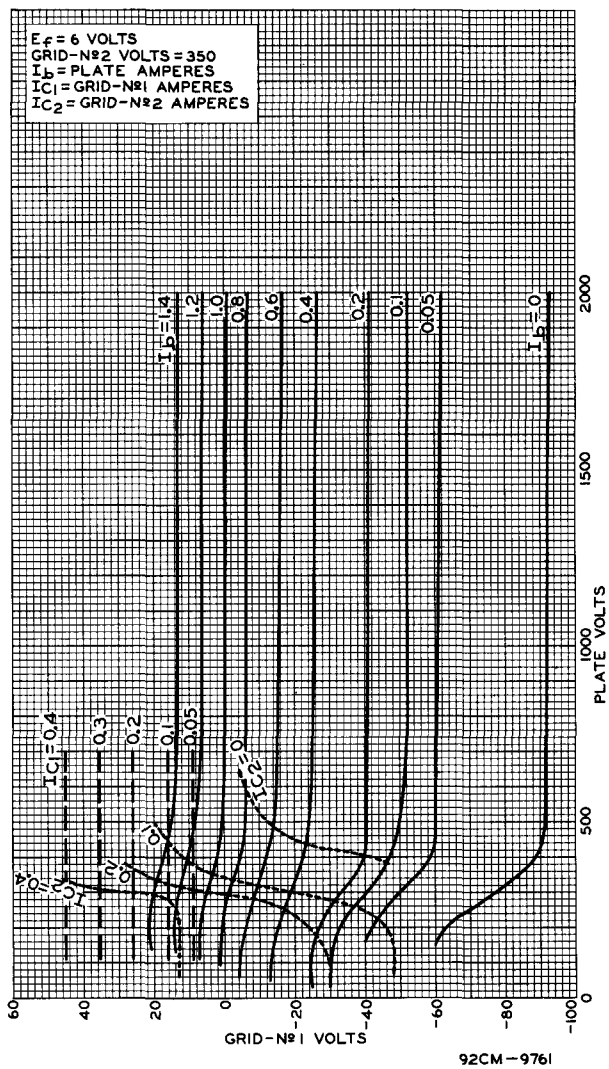

Fig. 4 - Typical Constant-Current Characteristics of Type 7034.

Grid-No. 2 voltage should be obtained from a source of good regulation. The plate voltage should be applied before or simultaneously with the grid-No. 2 voltage; otherwise, with voltage on grid-No. 2 only, its current may be large enough to cause excessive grid-No. 2 dissipation. A dc milliammeter should be used in the grid-No. 2 circuit so that its current may be measured and the screen dissipation determined.

DIMENSIONAL OUTLINE

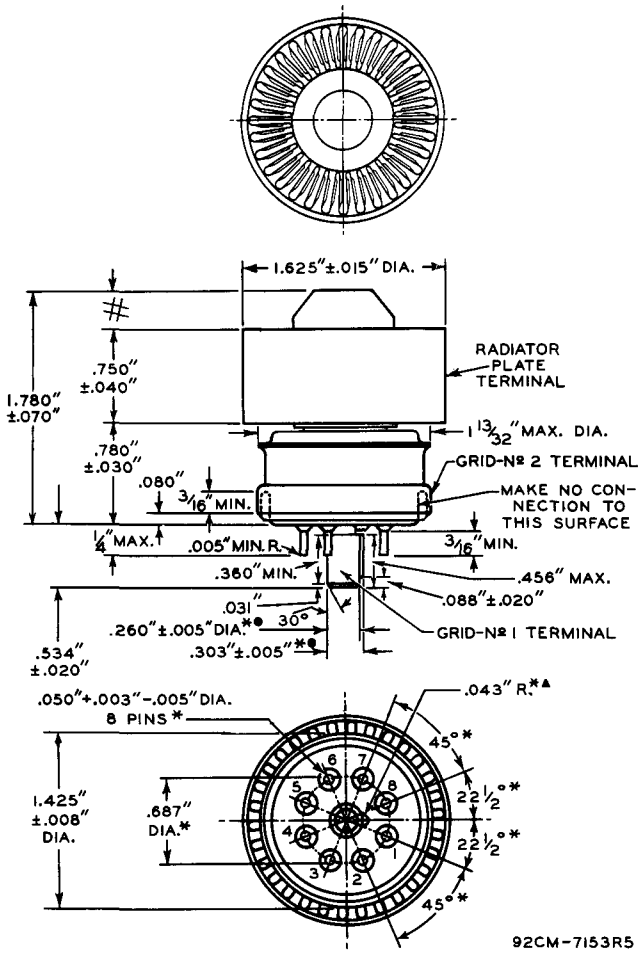

Grid-No.1 plug dimensions are measured by the use of the series of gauges shown in Sketches G_1 and G_2. In the following instructions for the use of these gauges, "Go" indicates that the entire grid-No.1 plug key will enter the gauge; and "No-Go" indicates that the grid-No.1 plug key will not enter the gauge more than 1/16". Instructions for the use of the gauges follow:

▲ GAUGES G_1-1, G_1-2, G_1-3, and G_1-4

Using only slot C, try these gauges in numerical order until one is found that will accept the entire grid-No.1 plug. Using the first gauge thus found, it will not be possible to insert the grid-No.1 plug in Slot B.

● GAUGES G_2-1, G_2-2, and G_2-3

The grid-No.1 plug will be rejected by gauges G_2-1 and G_2-2, but will be accepted by gauge G_2-3.

* Base-pin positions are held to tolerances such that the entire length of the pins will, without undue force, pass into and disengage from the flat-plate gauge shown in Sketch G_3.

\# Dome shape will fall within shaded area of the comparator contour template.

BASING DIAGRAM
Bottom View

PIN 1: GRID No.2 (For use at the lower frequencies)
PIN 2: CATHODE
PIN 3: HEATER
PIN 4: CATHODE
PIN 5: INTERNAL CONNECTION—Do Not Use
PIN 6: CATHODE

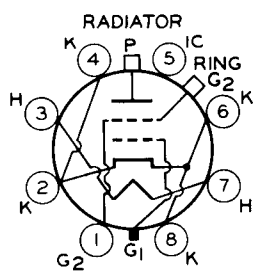

PIN 7: HEATER
PIN 8: CATHODE
BASE INDEX PLUG: GRID No.1
RADIATOR: PLATE
RING TERMINAL:
Grid No.2 (For use at the higher frequencies)

Gauge Sketch G_1

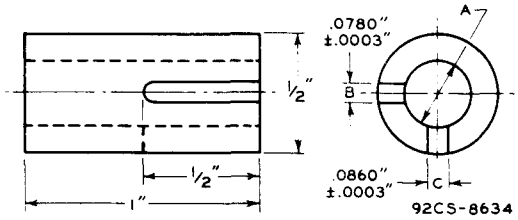

Gauge	Dimension A
G_1-1	.2575" + .0000" − .0005"
G_1-2	.2600" + .0000" − .0005"
G_1-3	.2625" + .0000" − .0005"
G_1-4	.2650" + .0000" − .0005"

Gauge Sketch G_2

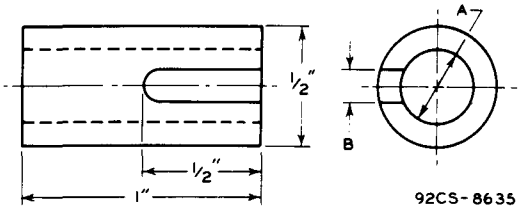

Gauge	Dimension	
	A	B
G_2-1	.2550" + .0000" − .0005"	.125"
G_2-2	.2980" + .0000" − .0005"	none
G_2-3	.3080" + .0000" − .0005"	none

COMPARATOR CONTOUR TEMPLATE

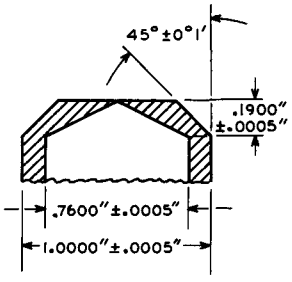

Gauge Sketch G_3

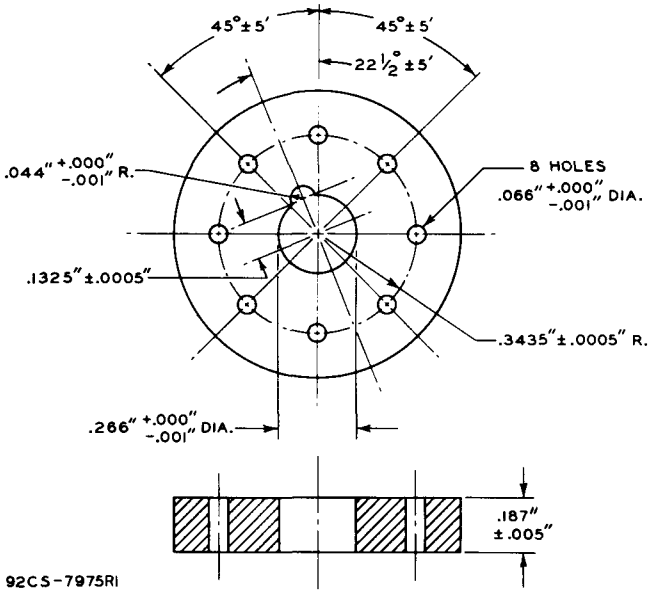

TOLERANCES ARE NOT CUMULATIVE

Suggested Design for Extractor to Remove Tube from Cavity

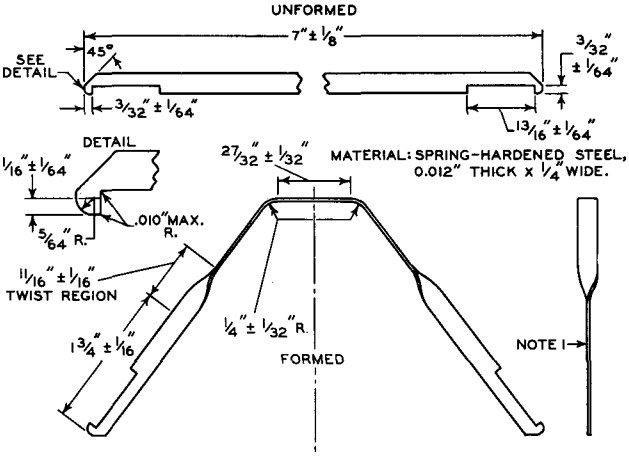

NOTE 1: BURR MUST NOT EXCEED 0.002" IN DIRECTION PERPENDICULAR TO FLAT SURFACES. THE CORRESPONDING FLAT SURFACES OF THE TWO LEGS SHOULD BE IN THE SAME PLANE WITHIN 1/16".

Information furnished by RCA is believed to be accurate and reliable. However, no responsibility is assumed by RCA for its use; nor for any infringements of patents or other rights of third parties which may result from its use. No license is granted by implication or otherwise under any patent or patent rights of RCA.