TUNG-SOL

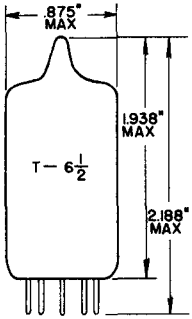

GLASS BULB
SMALL BUTTON
9 PIN BASE E9-1
OUTLINE DRAWING
JEDEC 6-2

TWIN TRIODE

MINIATURE TYPE

COATED UNIPOTENTIAL CATHODE

HEATER

SERIES	PARALLEL
12.6 VOLTS	6.3 VOLTS
150 MA.	300 MA.

AC OR DC

FOR 12.6 VOLT OPERATION APPLY HEATER VOLTAGE BETWEEN PINS #4 AND #5. FOR 6.3 VOLT OPERATION APPLY HEATER VOLTAGE BETWEEN PIN #9 AND PINS #4 AND #5 CONNECTED TOGETHER.

ANY MOUNTING POSITION

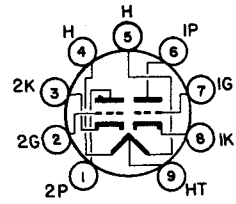

BOTTOM VIEW
BASING DIAGRAM
JEDEC 9A

THE 7025 COMBINES TWO COMPLETELY INDEPENDENT HIGH-MU TRIODES IN THE SMALL 9 PIN BUTTON CONSTRUCTION. IT IS INTENDED FOR APPLICATIONS WHERE HIGH VOLTAGE GAIN AND LOW HEATER POWER ARE THE IMPORTANT CONSIDERATION, SUCH AS VOLTAGE AMPLIFIER, PHASE INVERTERS AND MULTIVIBRATORS. LOW NOISE AND LOW HUM IS A SPECIAL FEATURE OF THIS TYPE.

DIRECT INTERELECTRODE CAPACITANCES

	WITH SHIELD[A]	WITHOUT SHIELD	
GRID TO PLATE	1.7	1.7	pf
INPUT	1.8	1.6	pf
OUTPUT (SECTION 1)	1.9	0.46	pf
OUTPUT (SECTION 2)	1.9	0.34	pf

[A] WITH EXTERNAL SHIELD #315 CONNECTED TO CATHODE OF SECTION UNDER TEST.

RATINGS

INTERPRETED ACCORDING TO DESIGN CENTER VALUES

EACH SECTION

MAXIMUM HEATER—CATHODE VOLTAGE	180	VOLTS
MAXIMUM PLATE VOLTAGE	300	VOLTS
MAXIMUM POSITIVE DC GRID VOLTAGE	0	VOLTS
MAXIMUM NEGATIVE DC GRID VOLTAGE	-50	VOLTS
MAXIMUM PLATE DISSIPATION	1	WATT

CONTINUED ON FOLLOWING PAGE

CONTINUED FROM PRECEDING PAGE

TYPICAL OPERATING CONDITIONS AND CHARACTERISTICS

CLASS A_1 AMPLIFIER - EACH SECTION

PLATE VOLTAGE	100	250	VOLTS
GRID VOLTAGE	-1	-2	VOLTS
PLATE CURRENT	0.5	1.2	MA.
AMPLIFICATION FACTOR	100	100	
PLATE RESISTANCE	80 000	62 500	OHMS
TRANSCONDUCTANCE	1 250	1 600	µMHOS

ADDITIONAL CHARACTERISTICS

EQUIVALENT NOISE AND HUM VOLTAGE (REFERENCED TO GRID, EACH UNIT):

AVERAGE VALUE 1.8 MICROVOLTS RMS

MEASURED IN "TRUE RMS" UNITS UNDER THE FOLLOWING CONDITIONS: HEATER VOLTAGE (PARALLEL CONNECTION), 6.3 VOLTS AC; CENTER TAP OF HEATER TRANSFORMER GROUNDED; PLATE SUPPLY VOLTAGE, 250 VOLTS DC; PLATE LOAD RESISTOR, 100000 OHMS; CATHODE RESISTOR, 2700 OHMS BYPASSED BY 100-µf CAPACITOR; GRID RESISTOR, 0 OHMS; AND AMPLIFIER COVERING FREQUENCY RANGE BETWEEN 25 & 10000 CPS.

MAXIMUM VALUE 7 MICROVOLTS RMS

MEASURED IN "TRUE RMS" UNITS UNDER THE SAME CONDITIONS AS FOR "AVERAGE VALUE" EXCEPT THAT THE CATHODE RESISTOR IS UNBYPASSED AND THAT THE GRID RESISTOR HAS A VALUE OF 50000 OHMS.

SIMILAR TYPE REFERENCE: 12AX7.

TUNG-SOL

RESISTANCE COUPLED AMPLIFIER

R_p MEG.	R_s MEG.	R_{g1} MEG.	E_{bb} = 90 VOLTS			E_{bb} = 180 VOLTS			E_{bb} = 300 VOLTS		
			R_k	GAIN	E_o	R_k	GAIN	E_o	R_k	GAIN	E_o
0.10	0.10	0.1	1700	31	5.0	1000	40	15	760	43	30
0.10	0.24	0.1	2000	38	6.9	1100	46	20	900	50	40
0.24	0.24	0.1	3500	43	6.5	2000	54	18	1600	58	37
0.24	0.51	0.1	3900	49	8.6	2300	59	24	1800	64	47
0.51	0.51	0.1	7100	50	7.4	4300	62	19	3100	66	39
0.51	1.0	0.1	7800	53	9.1	4800	64	24	3600	69	46
0.24	0.24	10	0	37	3.9	0	53	15	0	62	32
0.24	0.51	10	0	44	5.4	0	60	19	0	67	41
0.51	0.51	10	0	44	5.0	0	61	17	0	69	35
0.51	1.0	10	0	49	6.4	0	66	21	0	71	41

Eo IS MAXIMUM RMS VOLTAGE OUTPUT FOR FIVE PERCENT TOTAL HARMONIC DISTORTION.
GAIN MEASURED AT 2.0 VOLTS RMS OUTPUT.
FOR ZERO-BIAS DATA, GENERATOR IMPEDANCE IS NEGLIGIBLE.

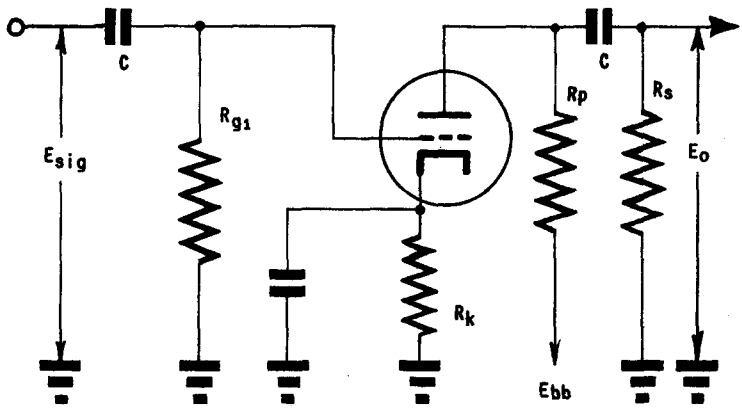

NOTE: COUPLING CAPACITORS (C) SHOULD BE SELECTED TO GIVE DESIRED FREQUENCY RESPONSE. Rk SHOULD BE ADEQUATELY BY-PASSED.

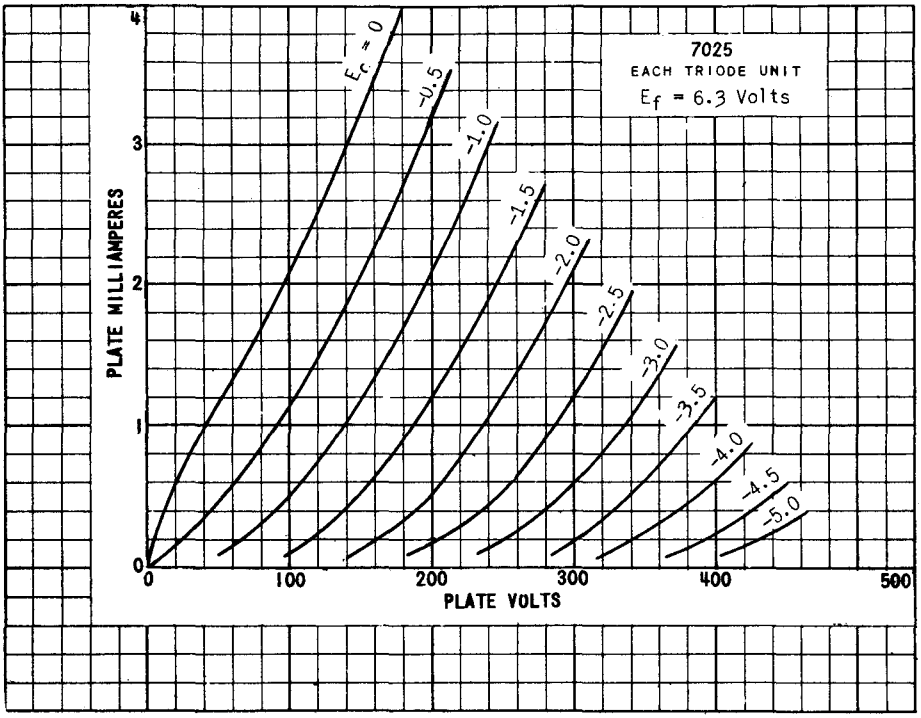
7025
EACH TRIODE UNIT
Ef = 6.3 Volts
Ec = 0
-0.5
-1.0
-1.5
-2.0
-2.5
-3.0
-3.5
-4.0
-4.5
-5.0
PLATE MILLIAMPERES
PLATE VOLTS
0
1
2
3
4
0
100
200
300
400
500

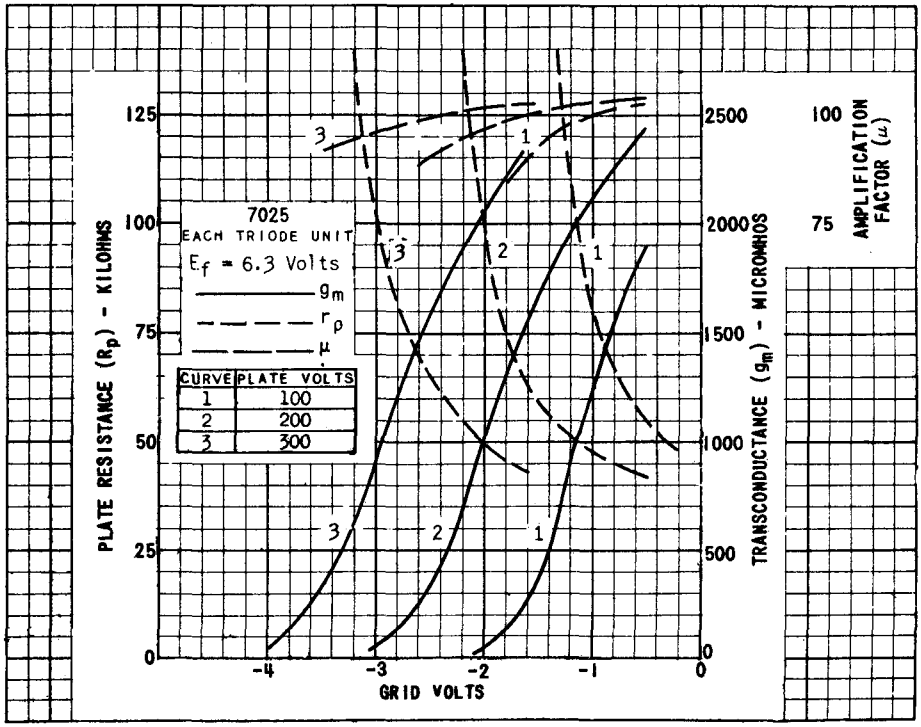
7025
EACH TRIODE UNIT
Ef = 6.3 Volts
gm
rp
μ
CURVE PLATE VOLTS
1 100
2 200
3 300
PLATE RESISTANCE (Rp) - KILOHMS
TRANSCONDUCTANCE (gm) - MICROMHOS
AMPLIFICATION FACTOR (μ)
GRID VOLTS
0
25
50
75
100
125
0
500
1000
1500
2000
2500
75
100
-4
-3
-2
-1
0