Electronic TUBE
KEN-RAD

6N7
Description and Rating
POWER-AMPLIFIER TWIN TRIODE

GENERAL DESCRIPTION

Principal Application: The 6N7 is a heater-cathode type twin triode designed for use as a class B power amplifier in the output stage of a-c or battery operated equipment. It may also be used in other applications such as a biased detector, oscillator phase inverter or class A amplifier. The 6N7 electrical ratings and characteristics are identical with those of the 6A6 and 6N7-G.

Cathode:	Coated Unipotential
Heater Voltage (A-C or D-C)	6.3 Volts
Heater Current	0.8 Ampere
Envelope:	MT-8 Metal Shell
Base:	B8-21 Small Wafer Octal 8-Pin Phenolic
Mounting Position:	Any

PHYSICAL DIMENSIONS

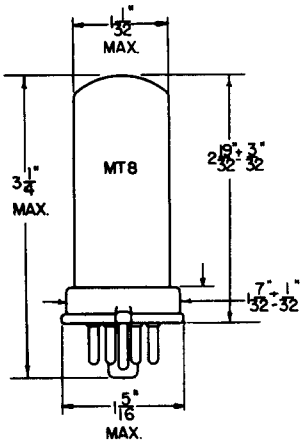

RMA 8-6

TERMINAL CONNECTIONS

Pin 1 - Shell
Pin 2 - Heater
Pin 3 - Plate - Unit Number 2
Pin 4 - Grid - Unit Number 2
Pin 5 - Grid - Unit Number 1
Pin 6 - Plate - Unit Number 1
Pin 7 - Heater
Pin 8 - Cathode

BASING DIAGRAM

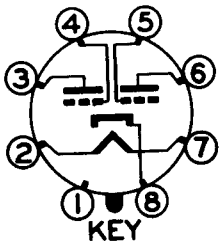

RMA 8B
BOTTOM VIEW

MAXIMUM RATINGS

EACH UNIT

CLASS B POWER AMPLIFIER

	Design Center	Absolute	
Plate Voltage	300	330	Volts
Peak Plate Current	125	140	Milliamperes
Average Plate Dissipation	5.50	6.05	Watts
D-C Heater-Cathode Voltage	90	100	Volts

CLASS A AMPLIFIER

Plate Voltage	300	330	Volts
Plate Dissipation	1.0	1.1	Watts
D-C Heater-Cathode Voltage	90	100	Volts

CHARACTERISTICS AND TYPICAL OPERATION

CLASS B POWER AMPLIFIER **

	Ideal	Typical	
Heater Voltage	6.3	6.3	Volts
Zero-Signal Plate Voltage	300	300	Volts
D-C Grid Bias Voltage	0	0	Volt
Peak A-F Grid-to-Grid Voltage °	58	82 *	Volts
Grid-Circuit Impedance per Unit	0	516 §	Ohms
Plate Supply Impedance	0	1000	Ohms
Zero-Signal D-C Plate Current	35	35	Milliamperes
Maximum-Signal D-C Plate Current	70	70	Milliamperes
Peak Grid Current per Unit	20	22	Milliamperes
Effective Plate to Plate Load Resistance	8000	8000	Ohms
Third Harmonic Distortion	3.5	7.5	Per Cent
Fifth Harmonic Distortion	1.5	2.5	Per Cent
Total Harmonic Distortion	4	8	Per Cent
Maximum-Signal Power Output	10	10	Watts

CLASS A AMPLIFIER - AS DRIVER Δ

Heater Voltage	6.3	6.3	Volts
Plate Voltage	250	294	Volts
Grid Bias Voltage φ	-5	-6	Volts
Amplification Factor	35	35	
Plate Resistance	11300	11000	Ohms
Transconductance	3100	3200	Micromhos
Plate Current	6	7	Milliamperes

Note:

Approximately 20 watts power output may be obtained in a class B output stage by using two 6N7 tubes with the units of each tube connected in parallel and operated with 300 volts on each plate and with a 5000-ohm plate-to-plate load.

** *Unless otherwise specified the values shown are for the two units.*

* *Includes peak voltage drop through the grid circuit impedance.*

° *For values of power output shown.*

§ *At 400 cycles for class B stage in which the effective resistance per grid circuit is 500 ohms, and the leakage reactance of the coupling transformer is 50 millihenrys.*

Δ *Triode units connected in parallel.*

φ *The d-c resistance in the grid circuit of the 6N7 as a class A amplifier should not exceed 0.5 megohm for self-bias operation and 0.1 megohm for fixed bias operation.*

CLASS A RESISTANCE-COUPLED AMPLIFIER

Rp Meg.	Rg1 Meg.	Rs Meg.	Ebb = 90 Volts			Ebb = 180 Volts			Ebb = 300 Volts		
			Rk	Gain	Eo	Rk	Gain	Eo	Rk	Gain	Eo
0.10	*	0.10	2000	17	13	1300	19	34	1100	20	58
0.10	*	0.24	2200	20	18	1600	22	43	1300	23	78
0.24	*	0.24	4300	22	17	3000	24	41	2700	25	72
0.24	*	0.51	5100	23	20	3600	25	49	3300	27	85
0.51	*	0.51	7500	24	19	5100	26	44	4300	27	73
0.51	*	1.0	8200	25	23	6200	28	52	5100	29	91
0.24	10	0.24	---	22	13	---	25	33	---	27	56
0.24	10	0.51	---	24	17	---	27	43	---	29	72
0.51	10	0.51	---	25	15	---	27	38	---	29	66
0.51	10	1.0	---	27	19	---	29	46	---	30	80

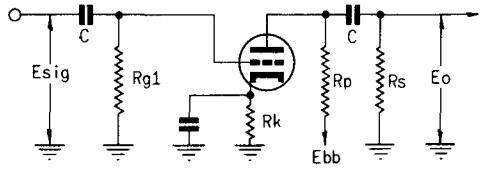

Note: Coupling capacitors (C) should be selected to give desired frequency response. Rk should be adequately by-passed.

Notes: 1. Eo is maximum RMS voltage output for five percent (5%) total harmonic distortion. 2. Gain measured at 2.0 volts RMS output. 3. For zero-bias data generator impedence is negligible. *Value of Rg1 is non-critical.

AVERAGE PLATE CHARACTERISTICS

EACH TRIODE UNIT

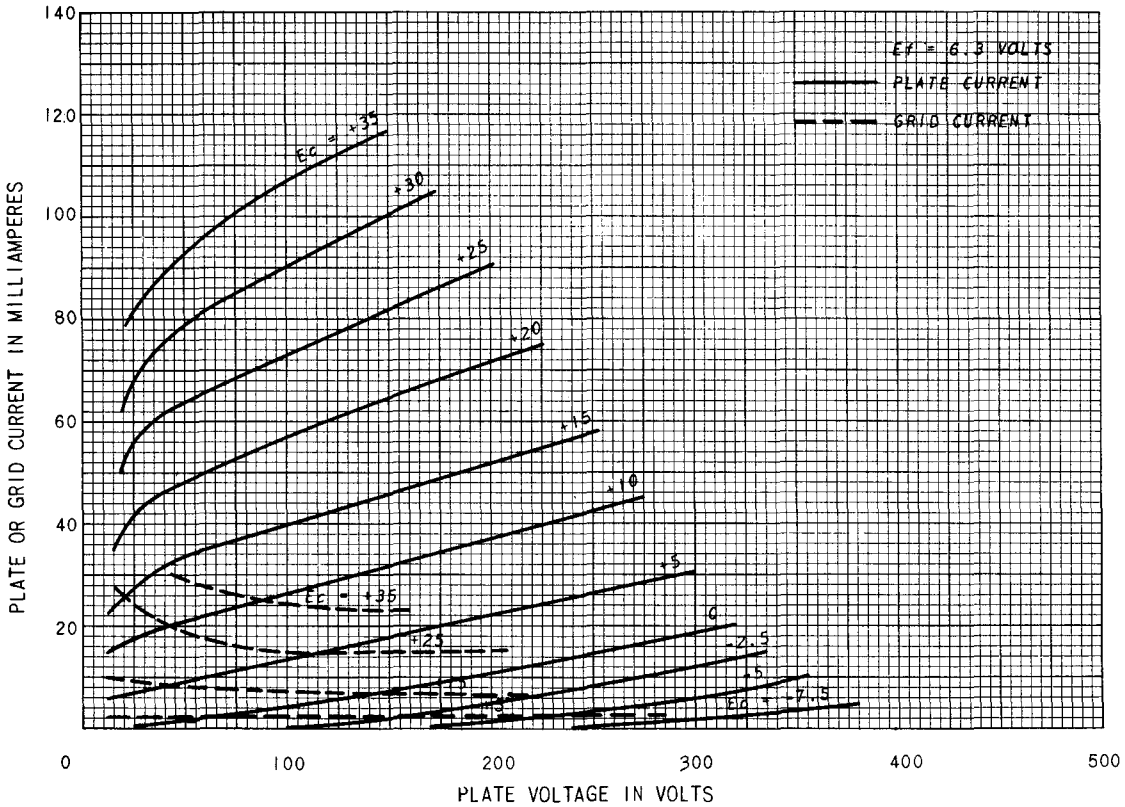

AVERAGE PLATE CHARACTERISTICS
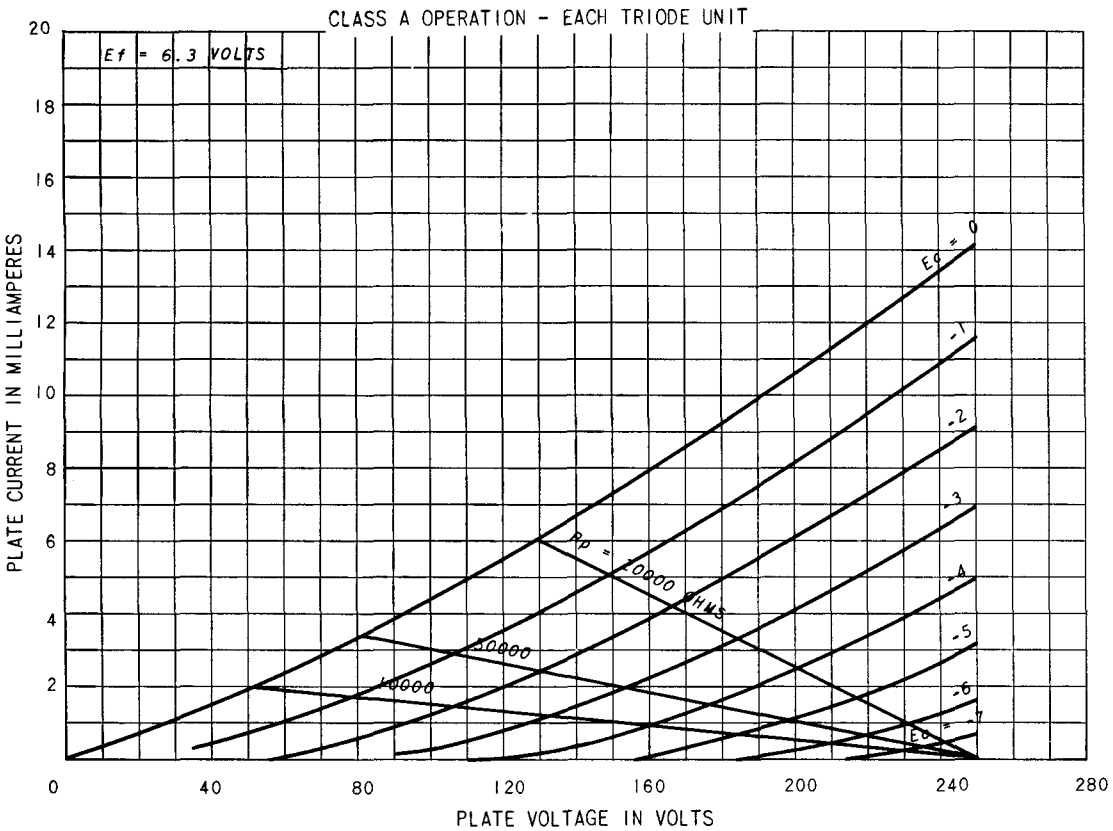
CLASS A OPERATION - EACH TRIODE UNIT