from JEDEC release #4759E,
Feb. 14, 1966

6JU6, 22JU6

BEAM POWER TUBES

T12 Novar Types

Controlled Heater Warm-Up Time (22JU6)

For Horizontal-Deflection-Amplifier Service in Low-B+, Black-and-White TV Receivers

RCA Dark Heater

RCA-6JU6* and 22JU6 are high-perveance beam power tubes of the novar type having a T12 envelope. These types are particularly useful as horizontal-deflection amplifier tubes in black-and-white television receivers operating at low B + voltages.

A major feature of the 6JU6 and 22JU6 is a special plate structure designed to minimize secondary-electron emission from the plate. This structure provides a high ratio of plate current to grid-No.2 current and a high zero-bias plate current at low plate voltage and low grid-No.2 input. The low-voltage knee characteristic of the 6JU6 and 22JU6 permits the development of the high voltage required for the picture tube and a reserve of horizontal scan at low-B+ supply voltages. These tubes require a relatively low value of grid-No.1 bias voltage for plate current cutoff under high pulse voltage conditions. This feature makes possible efficient operation in receivers with low grid-No.1 driving voltage.

A separate base-pin terminal is provided for grid No.3 to permit the application of a positive voltage to this grid to minimize possible interference from "snivets". Two base-pin terminals are provided for grid No.2 to increase grid dissipation capability and to provide added flexibility in circuit design.

The 22JU6 has a 0.450-A/22.0-V heater having a controlled 11-second warm-up time for use in series heater-string arrangements. Both the 6JU6 and 22JU6 utilize the RCA Dark Heater for long life and dependable performance.

* Formerly Developmental Type A40523A.

ELECTRICAL CHARACTERISTICS -- Bogey Values

		6JU6	22JU6	
Heater Voltage, ac or dc	E_h	6.3	22.0	V
Heater Current	I_h	1.6	0.450	A
Heater Warm-up Time	t_h	-	11	s
Direct Interelectrode Capacitances:[a]				
Grid No.1 to plate	c_{g1-p}	1.2		pF
Input: G1 to (K,G3,G2,H)	c_i	22		pF
Output: P to (K,G3,G2,H)	c_o	9.0		pF
For the following characteristics, see Conditions below:				
Amplification Factor (Triode Connection)[b]	μ	-	4.7	
Plate Resistance (Approx.)	r_p	-	18	kΩ
Transconductance	g_m	-	7000	μmho
DC Plate Current	I_b	470[c]	45	mA
DC Grid-No.2 Current	I_{c2}	32[c]	1.5	mA
Cutoff DC Grid-No.1 Voltage for I_b = 1 mA	$E_{c1(co)}$	-75	-32	V

Conditions:

Heater Voltage	E_h	Bogey value				V
Peak Positive-Pulse Plate Voltage[d]	e_{bm}	6500	-	-	-	V
DC Plate Voltage	E_b	-	50	125	130	V
Grid No.3	-	Connected to cathode at socket				
DC Grid-No.2 Voltage	E_{c2}	125	125	125	125	V
DC Grid-No.1 Voltage	E_{c1}	-	0	-20	-20	V

MECHANICAL CHARACTERISTICS

Maximum Overall Length	3.550 in
Maximum Seated Length	3.170 in.
Maximum Diameter	1.562 in
Envelope	JEDEC Designation T12
Top Cap[e]	Skirted Miniature (JEDEC Designation C1-2 or C1-3)
Bases[f] (Alternatives)	Large-Button Novar 9-Pin with Exhaust Tip (JEDEC Designation E9-88) or Large-Button Novar 9-Pin (JEDEC Designation E9-76)
Terminal Connections (See TERMINAL DIAGRAM)	JEDEC Designation 9QL
Type of Cathode	Coated Unipotential
Operating Position	Any

MAXIMUM RATINGS -- Design Maximum Values[g]

For operation as a Horizontal-Deflection-Amplifier Tube in a 525-line, 30-frame system

DC Plate Supply Voltage	E_{bb}	770	V
Peak Positive-Pulse Plate Voltage[h]	e_{bm}	6500	V
Peak Negative-Pulse Plate Voltage	$-e_{bm}$	1500	V
DC Grid-No.3 Voltage[k]	E_{c3}	75	V
DC Grid-No.2 (Screen-Grid) Voltage	E_{c2}	220	V
DC Grid-No.1 (Control-Grid) Voltage:			
Negative-bias value	$-E_{c1}$	55	V
Peak Negative-Pulse Grid-No.1 Voltage	$-e_{c1m}$	330	V

RADIO CORPORATION OF AMERICA
Electronic Components and Devices Harrison, N. J.

Trademark(s) ® Registered
Marca(s) Registrada(s)

6JU6, 22JU6, 12-65
Supersedes 22JU6 issue dated 6-64
Printed In U.S.A.

Heater-Cathode Voltage:			
Peak	e_{hkm}	±200	V
Average	$E_{hk(av)}$	100	V
Heater Voltage, ac or dc *(6JU6)*	E_h	5.7 to 6.9	V
Heater Current *(22JU6)*	I_h	0.420 to 0.480	A
Cathode Current:			
Peak	i_{km}	950	mA
Average	$I_{k(av)}$	275	mA
Grid-No.2 Input	P_{g2}	3.5	W
Plate Dissipation[m]	P_b	17	W
Envelope Temperature (at hottest point on envelope surface)	T_E	240	°C

MAXIMUM CIRCUIT VALUES

Grid-No.1-Circuit Resistance:	$R_{g1(ckt)}$		
For grid-No.1-resistor-bias operation	-	0.47	MΩ
For plate-pulsed operation (horizontal-deflection circuits only)	-	10	MΩ

a Measured without external shield in accordance with the current issue of EIA Standard RS-191.

b With grid No.2 connected to plate at socket.

c This value can be measured by a method involving a recurrent waveform such that the Maximum Ratings of the tube will not be exceeded.

d Under pulse-duration condition specified in Footnote h.

e Designed to mate with "1/4-inch" Connector generally available from your local RCA Distributor.

f Designed to mate with "Novar 9-Contact" Socket generally available from your local RCA Distributor.

g As defined in the current issue of EIA Standard RS-239.

h This rating is applicable where the duration of the voltage pulse does not exceed 15% of one horizontal scanning cycle. In a 525-line, 30-frame system, 15% of one horizontal scanning cycle is 10 μs.

k In horizontal-deflection-amplifier service, a positive voltage may be applied to grid No.3 to reduce interference from "snivets" which may occur in both vhf and uhf television receivers. A typical operating value for this voltage is 30 V.

m An adequate bias resistor or other means is required to protect the tube in the absence of excitation.

TYPICAL PLATE CHARACTERISTICS

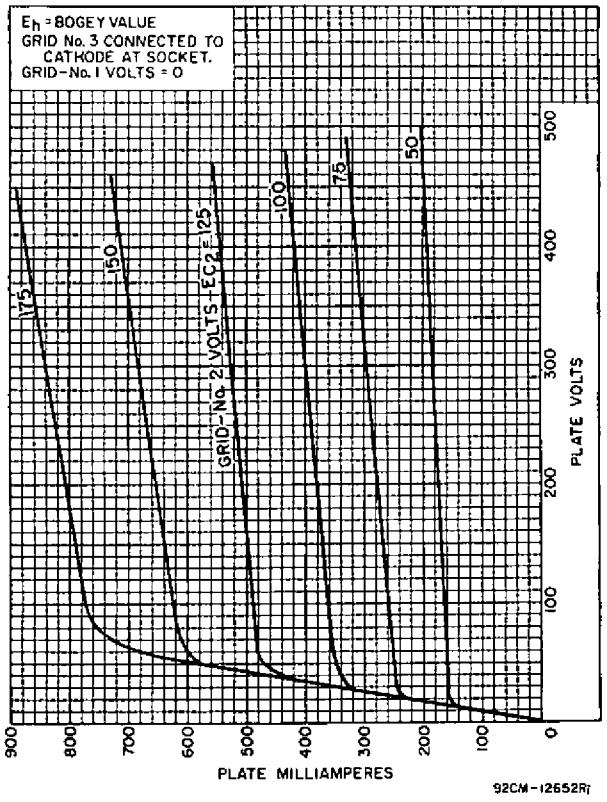

TYPICAL CHARACTERISTICS

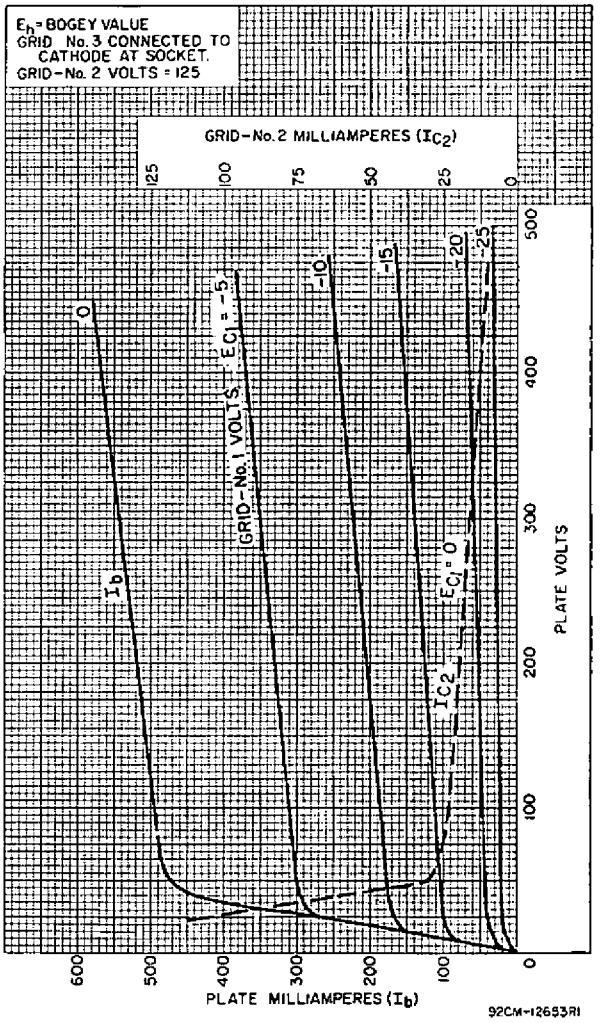

DIMENSIONAL OUTLINE
Dimensions in Inches

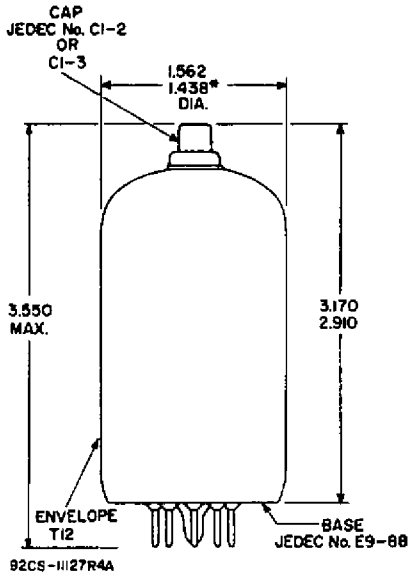

Alternative Base

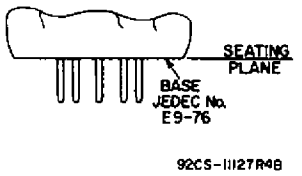

* Applies to the minimum diameter except in the area of the seal.

TERMINAL DIAGRAM (Bottom View)

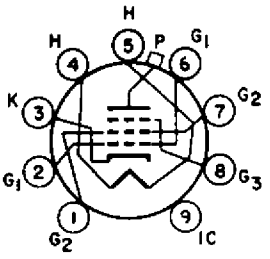

JEDEC 9QL

Pin 1 - Grid No.2	Pin 6 - Grid No.1
Pin 2 - Grid No.1	Pin 7 - Grid No.2
Pin 3 - Cathode	Pin 8 - Grid No.3
Pin 4 - Heater	Pin 9 - Do Not Use
Pin 5 - Heater	Top Cap - Plate

Information furnished by RCA is believed to be accurate and reliable. However, no responsibility is assumed by RCA for its use; nor for any infringements of patents or other rights of third parties which may result from its use. No license is granted by implication or otherwise under any patent or patent rights of RCA.