ELECTRONIC INNOVATIONS IN ACTION

TUBES

Compactron Beam Triode

6JK5

- COLOR TV TYPE
- FRAME-GRID CONSTRUCTION
- DIFFUSION BONDED CATHODE
- 35 WATTS PLATE DISSIPATION
- 325 MILLIAMPERES PEAK PLATE CURRENT
- TRANSCONDUCTANCE = 65000 MICROMHOS

The 6JK5 is a compactron frame-grid beam triode suited for use as a pulse-type high-voltage regulator in the high-voltage power supply of color television receivers.

Features of the 6JK5 include a diffusion bonded cathode coating which provides a positive bond between the cathode coating and base material, thereby practically eliminating grid-to-cathode shorts caused by cathode flaking. By operating at a relatively low potential (3500 volts), this pulse-type regulator provides much less stress on internal components than shunt regulators operating in the 25000-volt range.

GENERAL

ELECTRICAL

Cathode - Coated Unipotential

Heater Characteristics and Ratings

Heater Voltage, AC or DC★	6.3 ± 0.6	Volts
Heater Current●	1.8	Amperes
Direct Interelectrode Capacitances, approximate♦		
Grid to Plate: (g to p)	1.8	pf
Input: g to (h + k + b.p.)	22	pf
Output: p to (h + k + b.p.)	11	pf

MECHANICAL

Operating Position - Any

Envelope - T-12, Glass

Base - E12-74, Button 12-Pin

Outline Drawing

Maximum Diameter	1.563	Inches
Minimum Diameter	1.437	Inches
Maximum Over-all Length	4.250	Inches
Maximum Seated Height	3.875	Inches
Minimum Seated Height	3.625	Inches

MAXIMUM RATINGS

HIGH-VOLTAGE REGULATOR SERVICE§—DESIGN-MAXIMUM VALUES

Peak Plate Voltage	5500	Volts
Plate Dissipation	35	Watts
Peak Plate Current	325	Milliamperes
Heater-Cathode Voltage		
Heater Positive with respect to Cathode		
DC Component	100	Volts
Total DC and Peak	200	Volts
Heater Negative with respect to Cathode⊕		
Total DC and Peak	450	Volts
Grid-Circuit Resistance▲	0.1	Megohms
Bulb Temperature at Hottest Point †	240	°C

PHYSICAL DIMENSIONS

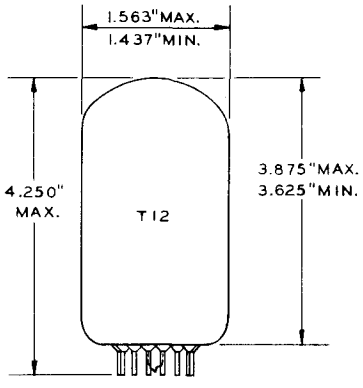

TERMINAL CONNECTIONS

Pin 1 - Heater
Pin 2 - Grid
Pin 3 - Beam Plate
Pin 4 - Cathode
Pin 5 - Internal Connection - Do Not Use
Pin 6 - Internal Connection - Do Not Use
Pin 7 - Plate
Pin 8 - Plate
Pin 9 - Internal Connection - Do Not Use
Pin 10 - Beam Plate
Pin 11 - Grid
Pin 12 - Heater

BASING DIAGRAM

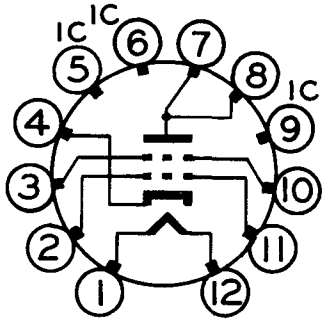

EIA 12JE

MAXIMUM RATINGS (Cont'd)

Design-Maximum ratings are limiting values of operating and environmental conditions applicable to a bogey electron tube of a specified type as defined by its published data and should not be exceeded under the worst probable conditions.

The tube manufacturer chooses these values to provide acceptable serviceability of the tube, making allowance for the effects of changes in operating conditions due to variations in the characteristics of the tube under consideration.

The equipment manufacturer should design so that initially and throughout life no design-maximum value for the intended service is exceeded with a bogey tube under the worst probable operating conditions with respect to supply-voltage variation, equipment component variation, equipment control adjustment, load variation, signal variation, environmental conditions, and variations in the characteristics of all other electron devices in the equipment.

CHARACTERISTICS AND TYPICAL OPERATION

AVERAGE CHARACTERISTICS

Pulse Plate Voltage□	3500	Volts
Beam Plate Connected to Cathode at Socket		
Negative DC Grid Voltage	4.4	Volts
Peak Plate Current	300	Milliamperes
Amplification Factor	300	
Transconductance	65000	Micromhos
Plate Resistance, approximate	4600	Ohms
Grid Voltage, approximate		
Eb = 3500 Volts, Ib = 1.0 Milliamperes	-13	Volts

NOTES

★ The equipment designer should design the equipment so that heater voltage is centered at the specified bogey value, with heater supply variations restricted to maintain heater voltage within the specified tolerance.

● Heater current of a bogey tube at Ef = 6.3 volts.

♦ Without external shield.

§ For operation in a 525-line, 30-frame television system as described in "Standards of Good Engineering Practice Concerning Television Broadcast Stations", Federal Communications Commission. The duty cycle of the voltage pulse must not exceed 15 percent of one scanning cycle.

⊕ Sufficient impedance (220 ohms by-passed with a 0.01 microfarad capacitor is suggested) should be in series with the cathode to limit the cathode current under prolonged heater-cathode short-circuit conditions. This protective impedance will minimize the danger of heater burnout in case of a momentary heater-cathode arc within the tube.

▲ Larger values of grid-circuit resistance may be used if provisions are made to protect the tube.

□ Duty cycle of the pulse must be less than 2.5 percent.

† Measured with an infrared thermometer, Ircon Model 700 BC or equivalent, at an ambient temperature of 40 °C.

The tubes and arrangements disclosed herein may be covered by patents of General Electric Company or others. Neither the disclosure of any information herein nor the sale of tubes by General Electric Company conveys any license under patent claims covering combinations of tubes with other devices or elements. In the absence of an express written agreement to the contrary, General Electric Company assumes no liability for patent infringement arising out of any use of the tubes with other devices or elements by any purchaser of tubes or others.

AVERAGE PLATE CHARACTERISTICS

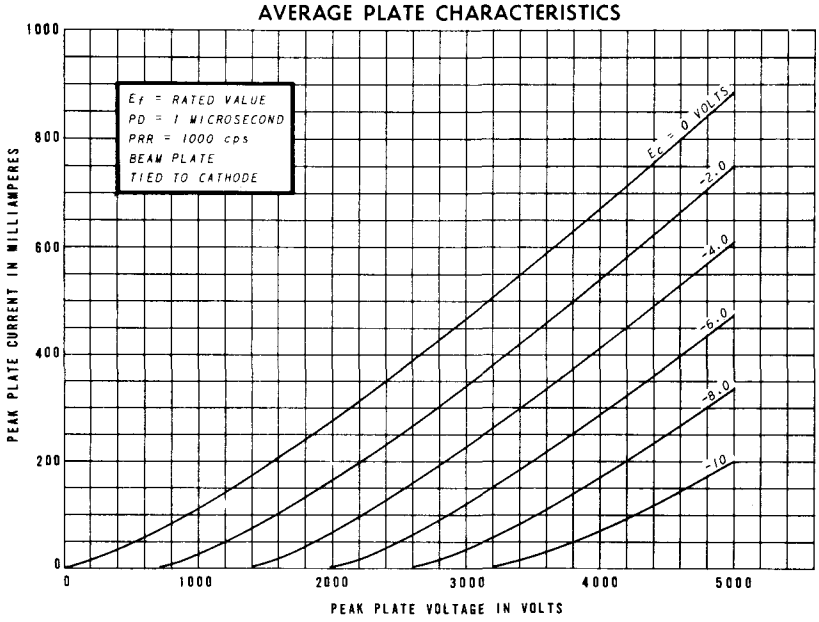

TUBE PRODUCTS DEPARTMENT
Owensboro, Kentucky 42301

GENERAL ELECTRIC