from JEDEC release #4772B,
April 11, 1966

6JE6A, 24JE6A
BEAM POWER TUBES

RCA Dark Heater

For Color-TV Horizontal-Deflection Amplifier Circuits Using 270 V to over 400 V "B" Supplies

T12 Novar Types

RCA-6JE6A and 24JE6A are double-ended, high-perveance beam power tubes of the novar type having a T12 envelope. These types are especially useful as horizontal-deflection-amplifier tubes in color-TV receivers. The 6JE6A has all the performance features of the 6JE6 and will directly replace the 6JE6 in all applications. In addition, it has a higher plate dissipation (30 watts) and offers the advantage of smaller size for compact equipment designs. The 6JE6A and 24JE6A can provide full-deflection power and high voltage in equipment using "B" supply voltages ranging from as low as 270 volts to as high as 400 volts or more.

Both the 6JE6A and 24JE6A have a maximum plate dissipation rating of 30 watts and a maximum grid-No.2 input rating of 5 watts. These ratings, in addition to high maximum ratings for peak positive-pulse plate voltage (7500 volts) and peak cathode current (1200 milliamperes), indicate the capability of these tubes to meet the stringent requirements of color-television deflection circuits. Other electrical features which contribute to the top performance of these tubes are high zero-bias plate current at low plate and grid-No.2 voltages, and a high operating ratio of plate current to grid-No.2 current.

The 6JE6A and 24JE6A feature a special plate structure designed to minimize secondary-electron emission from the plate and eliminate "knee" discontinuities in the zero-bias region of the Eb-Ib characteristic. A separate base-pin connection to grid No.3 is provided so that positive voltage can be applied to grid No.3 to minimize interference from "snivets" and to increase power output.

The 24JE6A has a 0.600-ampere/24.0-volt heater having a controlled 11-second warm-up time for use in series heater-string arrangements.

ELECTRICAL CHARACTERISTICS—Bogey Values

		6JE6A	24JE6A	
Heater Voltage, ac or dc	E_h	6.3	24.0	V
Heater Current	I_h	2.5	0.6	A
Heater Warm-up Time	t_h	-	11	s
Direct Interelectrode Capacitances:[a]				
Grid No.1 to plate	c_{g1-p}	0.56		pF
Input: G1 to (K, G3, G2, H)	c_i	22		pF
Output: P to (K, G3, G2, H)	c_o	11		pF

Information furnished by RCA is believed to be accurate and reliable. However, no responsibility is assumed by RCA for its use; nor for any infringements of patents or other rights of third parties which may result from its use. No license is granted by implication or otherwise under any patent or patent rights of RCA.

For the following characteristics, see Conditions below:

Amplification Factor (Triode Connection)[b]	μ	-	-	3[c]	-	-	2.8[d]	
Plate Resistance (Approx.)	r_p	-	-	5800	-	-	7000	Ω
Transconductance	g_m	-	-	9600	-	-	7500	μmho
DC Plate Current	I_b	-	580[e]	130	-	710[e]	95	mA
DC Grid-No.2 Current	I_{c2}	-	40[e]	2.8	-	55[e]	2.4	mA
Cutoff DC Grid-No.1 Voltage for I_b = 1 mA	$E_{c1(co)}$	-120	-	-54	-125	-	-60	V

Conditions:

Heater Voltage	E_h	← Bogey Value →						V
Peak Positive-Pulse Plate Voltage[f]	e_{bm}	5000	-	-	5000	-	-	V
DC Plate Voltage	E_b	-	55	175	-	60	175	V
DC Grid-No.3 Voltage	E_{c3}	30	30	30	30	30	30	V
DC Grid-No.2 Voltage	E_{c2}	125	125	125	145	145	145	V
DC Grid-No.1 Voltage	E_{c1}	-	0	-25	-	0	-35	V

MECHANICAL CHARACTERISTICS

Dimensional Outline . . . . . JEDEC No.12-116
Envelope . . . . . JEDEC Designation T12
Top Cap[g] . . . . . Small (JEDEC Designation C1-1)
Base[h] . . . . . Large-Button Novar 9-Pin with Exhaust Tip (JEDEC Designation E9-88)
Terminal Connections (See *TERMINAL DIAGRAM*) . . . . . JEDEC Designation 9QL
Type of Cathode . . . . . Coated Unipotential
Operating Position . . . . . Any

MAXIMUM RATINGS—Design-Maximum Values[k]

For operation as a Horizontal-Deflection-Amplifier Tube in a 525-line, 30-frame system

DC Plate Supply Voltage	E_{bb}	990	V
Peak Positive-Pulse Plate Voltage[m]	e_{bm}	7500	V
Peak Negative-Pulse Plate Voltage	$-e_{bm}$	1100	V
DC Grid-No.3 Voltage[n]	E_{c3}	75	V
DC Grid-No.2 (Screen-Grid) Voltage	E_{c2}	220	V
Peak Negative-Pulse Grid-No.1 (Control-Grid) Voltage	$-e_{c1m}$	330	V
Heater-Cathode Voltage:			
Peak	e_{hkm}	±200	V
Average	E_{hk}	100	V
Heater Voltage, ac or dc (*6JE6A*)	E_h	5.7 to 6.9	V
Heater Current (*24JE6A*)	I_h	560 to 640	mA
Cathode Current:			
Peak	i_{km}	1200	mA
Average	$I_{k(av)}$	350	mA
Grid-No.2 Input	P_{g2}	5	W
Plate Dissipation[p]	P_b	30	W
Envelope Temperature (at hottest point on envelope surface)	T_E	250	°C

RADIO CORPORATION OF AMERICA
Electronic Components and Devices Harrison, N. J.

6JE6A, 24JE6A 2-66
Supersedes 6JE6A issue dated 2-65
Printed in U.S.A.

Trademark(s) ® Registered
Marca(s) Registrada(s)

MAXIMUM CIRCUIT VALUES

Grid-No.1-Circuit Resistance:	$R_{g1(ckt)}$	
For grid-No.1-resistor-bias operation	-	0.47 MΩ
For plate-pulsed operation (horizontal-deflection circuits only)	-	10 MΩ

---

[a] Measured without external shield in accordance with the current issue of EIA Standard RS-191.

[b] With grid No.3 and grid No.2 connected, respectively, to cathode and plate at socket.

[c] Conditions: $E_b = E_{c2} = 125$ V, $E_{c1} = -25$ V.

[d] Conditions: $E_b = E_{c2} = 145$ V, $E_{c1} = -35$ V.

[e] This value can be measured by a method involving a recurrent waveform such that the Maximum Ratings of the tube will not be exceeded.

[f] Under pulse-duration condition specified in Footnote m.

[g] Designed to mate with connector for 0.360-inch cap, generally available from your local RCA Distributor.

[h] Designed to mate with "Novar 9-Contact" Socket generally available from your local RCA Distributor.

[k] As defined in the current issue of EIA Standard RS-239.

[m] This rating is applicable when the duration of the voltage pulse does not exceed 15% of one horizontal scanning cycle. In a 525-line, 30-frame system, 15% of one horizontal scanning cycle is 10 μs.

[n] In horizontal-deflection-amplifier service, a positive voltage should be applied to grid No.3 to reduce interference from "snivets", which may occur in both vhf and uhf television receivers, and to increase power output. A typical value for this voltage is 30 volts.

[p] An adequate bias resistor or other means is required to protect the tube in the absence of excitation.

TYPICAL CHARACTERISTICS

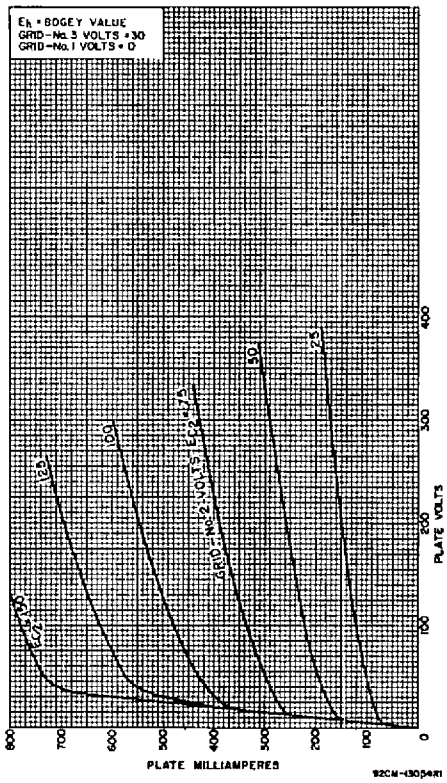

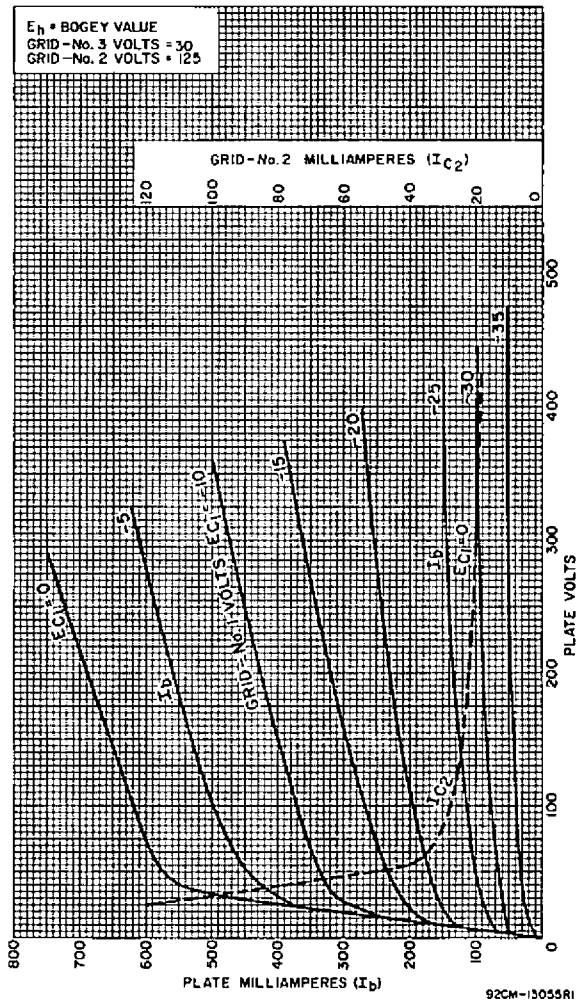

DIMENSIONAL OUTLINE JEDEC No.12-116

Dimensions in Inches

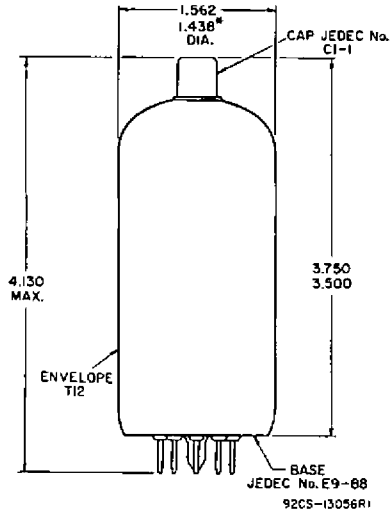

* Applies to the minimum diameter except in the area of the seal.

TERMINAL DIAGRAM (Bottom View)

Pin 1 - Grid No.2
Pin 2 - Grid No.1
Pin 3 - Cathode
Pin 4 - Heater
Pin 5 - Heater
Pin 6 - Grid No.1
Pin 7 - Grid No.2
Pin 8 - Grid No.3
Pin 9 - Do Not Use
Top Cap - Plate

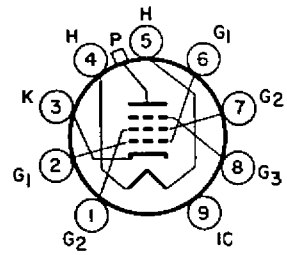

JEDEC 9QL