from JEDEC release #4656D,
Feb. 14, 1966

RECEIVING TUBES

SYLVANIA

DAMPER DIODE - HORIZONTAL AMP.

6HE7, 12HE7, 38HE7, 58HE7

- COLOR TV TYPE
- HIGH PERVEANCE DIODE
- BEAM POWER PENTODE
- COMPACTRON
- MULTI-SECTION
- LOW B+ OPERATION
- T-12 ENVELOPE
- 12 PIN BASE

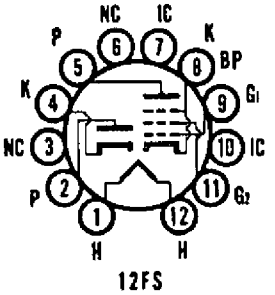

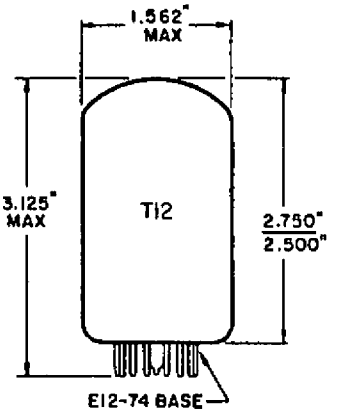

DESCRIPTION

Sylvania Types 6HE7, 12HE7, 38HE7 and 58HE7 contain a high perveance diode and a beam power pentode in a compactron style bulb. The diode section is intended for service as a damping diode and the pentode is designed for application as a horizontal deflection amplifier. The 38HE7 and 58HE7 have controlled heater warm-up time for series connected circuits.

MECHANICAL DATA

Envelope	T-12
Base	E12-74
Outline Drawing	12-57
Max. Diameter	1.562"
Max. Seated Height	2.750"
Max. Overall Length	3.125"
Cathode	Coated Unipotential
Operating Position	Any
Basing Diagram	12FS

Pin No. 1 - Heater
Pin No. 2 - Diode Plate
Pin No. 3 - No Connection
Pin No. 4 - Diode Cathode
Pin No. 5 - Pentode Plate
Pin No. 6 - No Connection

MECHANICAL DATA (Cont'd)

Pin No. 7 - Internal Connection
Pin No. 8 - Pentode Cathode and Beam Plates
Pin No. 9 - Pentode Grid No. 1
Pin No. 10 - Internal Connection
Pin No. 11 - Pentode Grid No. 2
Pin No. 12 - Heater
(Pins 3, 6, 7, and 10 should not be used as tie points)

ELECTRICAL DATA

HEATER CHARACTERISTICS AND RATINGS

Average Characteristics Heater Operation	58HE7 Series	38HE7 Series	12HE7 Parallel	6HE7 Parallel	
Heater Voltage	58.0	37.8	12.6(1)	6.3(1)	Volts
Heater Current	300(1)	450(1)	1350	2700	Ma
Heater Warm-up Time(2)	11	11	-	-	Seconds

Ratings (Design Maximum Values)(4)

	Min-Max	Min-Max	Min-Max	Min-Max	
Heater Voltage(3) . . .	- -	- -	11.4-13.8	5.7-6.9	Volts
Heater Current(3) . . .	280-320	420-480	- -	- -	Ma

Maximum Heater Cathode Voltage

	Diode	Pentode	
Heater Negative with Respect to Cathode			
DC	500	-	Volts
Total DC and Peak	4200	200	Volts
Heater Positive with Respect to Cathode			
DC	100	100	Volts
Total DC and Peak	200	200	Volts

DIRECT INTERELECTRODE CAPACITANCES (Unshielded)

Diode Section

Cathode to Plate and Heater	8.0	pf
Plate to Cathode and Heater	7.0	pf
Heater to Cathode	1.6	pf

Pentode Section

Grid No. 1 to Plate	0.38	pf
Input: g1 to (h + k + g2 + b.p.)	19	pf
Output: p to (h + k + g2 + b.p.)	8.0	pf

RATINGS (Design Maximum Rating System)

Horizontal Deflection Amplifier Service(5)

	Pentode Section	
DC Plate Supply Voltage (Boost + DC Power Supply). . . .	500	Volts
Peak Positive Pulse Plate Voltage.	5000	Volts
Peak Negative Pulse Plate Voltage.	0	Volt
Screen Voltage	150	Volts

ELECTRICAL DATA (Cont'd)

Negative DC Grid Number 1 Voltage	55	Volts
Peak Negative Grid No. 1 Voltage	330	Volts
Plate Dissipation	10.0	Watts
Screen Dissipation	3.5	Watts
Screen Dissipation (With Plate Dissipation Limited to 9 Watts)	4.0	Watts
DC Cathode Current	230	Ma
Peak Cathode Current	800	Ma
Grid No. 1 Circuit Resistance	1.0	Megohm

TV Damper Service(5)

	Diode Section	
Peak Inverse Plate Voltage	4200	Volts
Steady State Peak Plate Current	1200	Ma
DC Output Current	200	Ma
Bulb Temperature at Hottest Point	200	°C

AVERAGE CHARACTERISTICS

Pentode Section

Plate Voltage	5000	50	130	Volts
Screen Voltage	130	130	130	Volts
Grid No. 1 Voltage	-	0	-22	Volts
Plate Resistance (Approx.)	-	-	6200	Ohms
Transconductance	-	-	8800	Micromhos
Plate Current	-	450	60	Ma
Screen Current	-	40	2.8	Ma
Grid No. 1 Voltage (Approx.) Ib = 1.0 Ma	-80	-	-39	Volts
Triode Amplification Factor[7]	-	-	4.2	

Diode Section

Tube Voltage Drop Ib = 250 Ma DC	21	Volts

NOTES:

(1) For series/parallel operation of heaters, equipment should be designed that at normal supply voltage bogey tubes will operate at this value of heater current/voltage.

(2) Heater warm-up time is defined as the time required for the voltage across the heater to reach 80% of the rated heater voltage after applying four (4) times rated heater voltage to a circuit consisting of the tube heater in series with a resistance equal to three (3) times the rated heater voltage divided by the rated heater current.

NOTES: (Cont'd)

(3) Heater voltage supply variations shall be restricted to maintain heater current/voltage within the specified values.

(4) Design Maximum Ratings are limiting values of operating and environmental conditions applicable to a bogey electron tube of a specified type as defined by its published data and should not be exceeded under the worst probable conditions.

The tube manufacturer chooses these values to provide acceptable serviceability of the tube, making allowance for the effect of changes in operating conditions due to variations in the characteristics of the tube under consideration.

The equipment manufacturer should design so that initially and throughout life no design maximum value for the intended service is exceeded with a bogey tube under the worst probable operating conditions with respect to supply voltage variation, equipment component variation, equipment control adjustment, load variation, signal variation, environmental conditions, and variations in the characteristics of all other electron devices in the equipment.

(5) For operation in a 525 line, 30 frame system as described in "Standards of Good Engineering Practice for Television Broadcasting Stations; Federal Communications Commission." The duty cycle of the voltage pulse is not to exceed 15% of a scanning cycle.

(6) In stages operating with grid leak bias, an adequate cathode bias resistor or other suitable means is required to protect the tube in the absence of excitation.

(7) Amplification factor with tube operating as a triode with 130 volts on the plate and Grid No. 2 and -22 volts on Grid No. 1.

AVERAGE PLATE CHARACTERISTICS
(Diode Section)

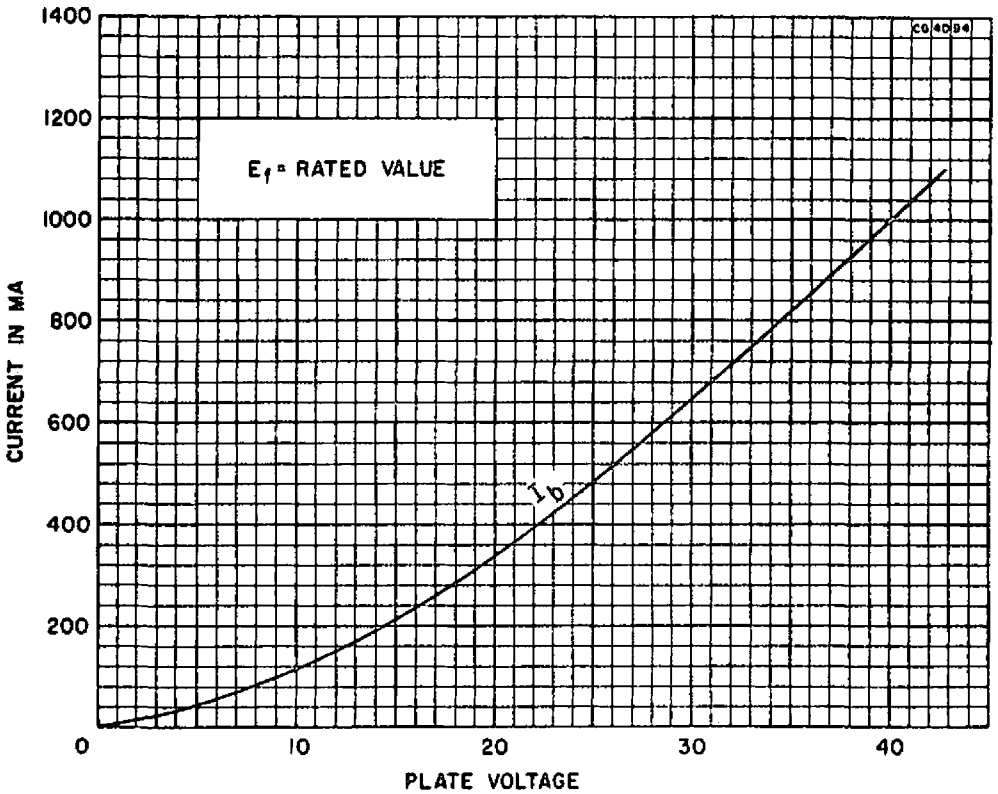

AVERAGE PLATE CHARACTERISTICS
(Pentode Section)

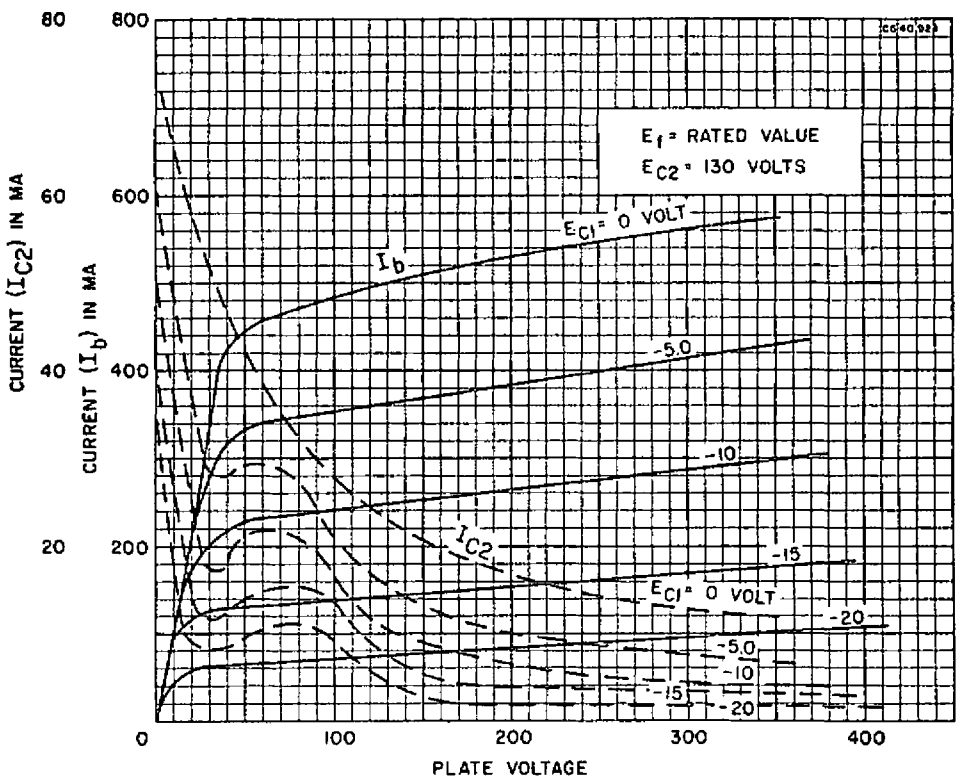

AVERAGE PLATE CHARACTERISTICS
(Pentode Section)

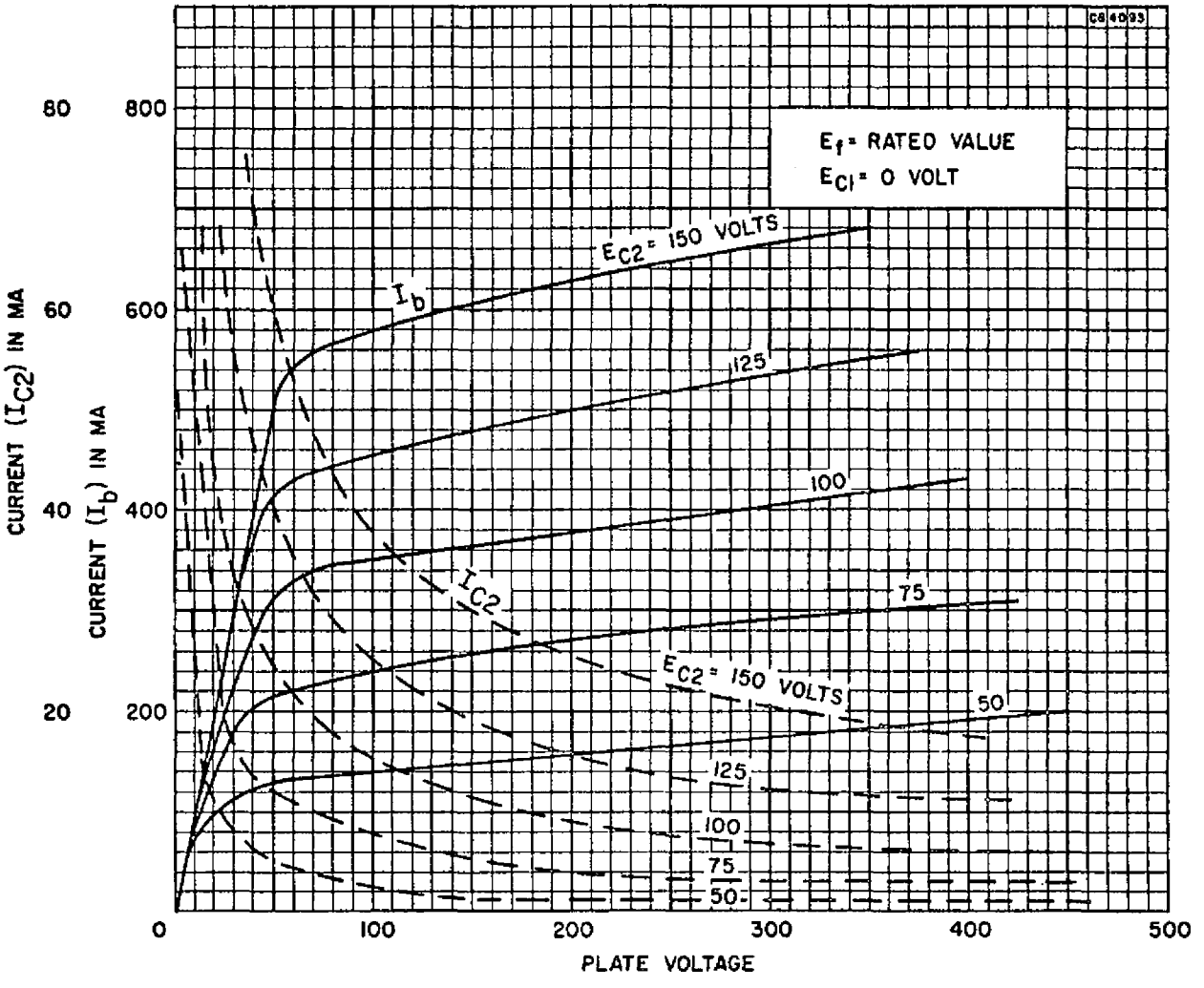
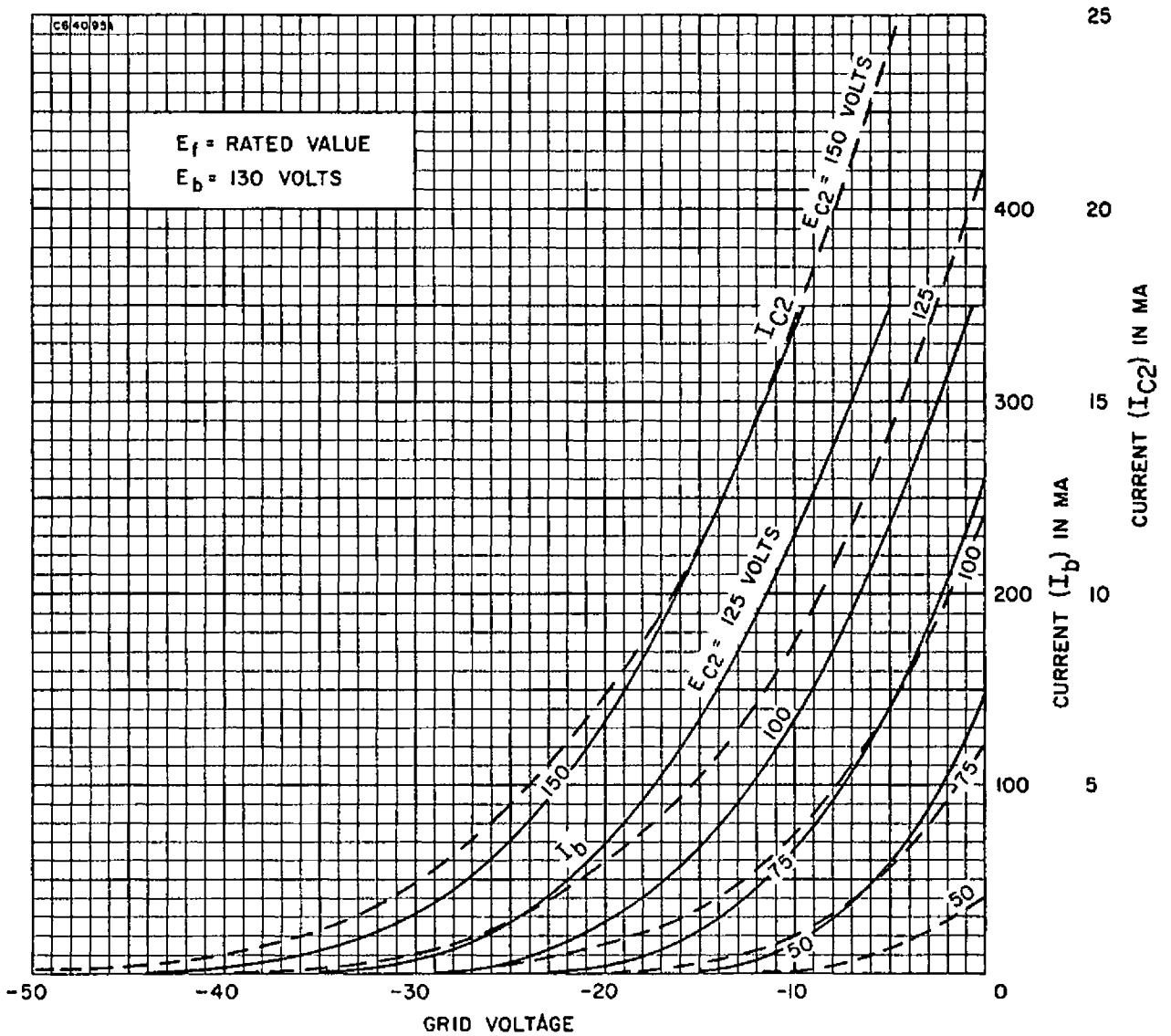
AVERAGE TRANSFER CHARACTERISTICS
(Pentode Section)