CHARACTERISTICS

GENERAL DATA[1]

Focusing Method			Electrostatic
Deflection Method			Electrostatic
Types*	Fluorescence	Phosphorescence	Persistence
6DP1	Green	.....	Medium
6DP2	Blue-Green	Green	Long
6DP7	Blue	Yellow	Long
6DP11	Blue	.....	Short
6DP14	Purple	Orange	Medium-Long
6DP19	Orange	Orange	Long
6DP25	Orange	Orange	Very Long
Faceplate			Clear

**In addition to the types shown, the 6DP- can be supplied with several other screen phosphors.*

ELECTRICAL DATA

Heater Voltage	6.3 Volts
Heater Current (all Sections)	1.50 to 1.98 Amperes
Direct Interelectrode Capacitances (approx.)	
Cathode to All Other Electrodes	6.0 $\mu\mu f$
Grid No. 1 to All Other Electrodes	6.5 $\mu\mu f$
D1 to D2	3.0 $\mu\mu f$
D3 to D4	2.0 $\mu\mu f$
D1 to All Other Electrodes	11.0 $\mu\mu f$
D2 to All Other Electrodes	11.0 $\mu\mu f$
D3 to All Other Electrodes	9.0 $\mu\mu f$
D4 to All Other Electrodes	9.0 $\mu\mu f$

MECHANICAL DATA

Overall Length	20-1/16 ± 3/8 Inches
Minimum Useful Screen Diameter	5-3/16 Inches
Bulb Contact (Recessed Small Ball)	J1-22
Base 25 Pin	B25-139
Basing	See Diagram
Base Alignment	
Base Key Aligns with Bulb Contact	± 10 Degrees
Positive Voltage on D1 Deflects the Beam Approx. Toward Base Key.	
Positive Voltage on D3 Deflects the Beam Approx. Toward Vacant Pin No. 23.	
Bulb Contact Alignment	
Post-accelerator Contact Aligns with D1-D2 trace of Gun "B"	± 3 Degrees
Bulb Contact on same side as Base Key	
Trace Alignment	
D1-D2 Trace Aligns with D3-D4 Trace	90 ± 2 Degrees
Corresponding Traces of each Gun align within ±2 Degrees	

QUICK REFERENCE DATA

Oscilloscope Tube
6" Direct Viewed
Flat Faceplate
Round Glass Type
Three Independent Guns
Electrostatic Deflection
Electrostatic Focus
Post Deflection Acceleration
High Deflection Sensitivity
High Deflection Accuracy
Aluminized Screen
25 Pin Base

SYLVANIA ELECTRIC PRODUCTS INC.
TELEVISION PICTURE TUBE DIVISION
SENECA FALLS, NEW YORK

Prepared and Released By The TECHNICAL PUBLICATIONS SECTION EMPORIUM, PENNSYLVANIA

SEPTEMBER, 1958

RATINGS

MAXIMUM RATINGS (Absolute Maximum Values)

Anode No. 3 Voltage	15,000 Volts	dc
Anode No. 2 Voltage	4,500 Volts	dc
Ratio Anode No. 3 Voltage to Anode No. 2 Voltage[2]	3.3:1 Maximum	
Anode No. 1 Voltage for Focus	1,540 Volts	dc
Grid No. 1 Voltage		
Negative Bias Value	220 Volts	dc
Positive Bias Value	0 Volts	dc
Positive Peak Value	2 Volts	
Peak Heater to Cathode Voltage		
Heater Negative with Respect to Cathode	200 Volts	
Heater Positive with Respect to Cathode	200 Volts	
Peak Voltage between Anode No. 2 and Any Deflection Plate	600 Volts	

TYPICAL OPERATING CONDITIONS

Anode No. 3 Voltage	12,000 Volts	dc
Anode No. 2 Voltage	4,000 Volts	dc
Anode No. 1 Voltage for Focus[3]	950 to 1225 Volts	dc
Grid No. 1 Voltage[4]	−75 to −124 Volts	dc
Modulation[5]	35 Volts	dc Max.
Line Width "A"[6]	.015 Max.	Inches
Deflection Factors		
D1-D2	112 to 138 Volts	dc/Inch
D3-D4	105 to 130 Volts	dc/Inch
Deflection Factor Uniformity[7]	5% Maximum	
Undeflected Spot Position[8]	Within 15 MM Square	
Useful Scan[9]		
D1-D2	4 Inches	
D3-D4	4 Inches	
Interaction Factor[10]	6×10^{-5} Max.	In./Volt
Pattern Distortion[11 & 12]		
Anode No. 1 Focus Current		
with Ib3 = 50 μadc	−10 to +5 μa	dc
with Ec1 = 0 Volts	−50 to +5 μa	dc

CIRCUIT VALUES

Grid No. 1 Circuit Resistance	1.5 Meg.	Max.
Deflection Circuit Resistance	1.0 Meg.	Max.

(It is recommended that the deflecting electrode circuit resistances be approximately equal. For low beam current conditions the resistance may be up to 5 megs.)

NOTES:

1. *Values are for each section unless otherwise specified.*
2. *This tube is designed for optimum performance when operating at an Eb3/Eb2 ratio of 3.0. Operation at other ratios may result in changes in deflection uniformity and pattern distortion.*
3. *At the specified operating condition, the focus voltage at Ib3 = 25 μadc shall be between 1000 and 1225 Volts dc and at Ib3 = 50 μadc shall be between 975 and 1225 volts dc. Scanning pattern and focus as per reference 4.12.6.1 of MIL-E-1C.*
4. *Visual extinction of undeflected focused spot.*
5. *For an Ib3 = 25 μadc. The modulation factor at Ib3 = 50 μadc shall be 50 V. Max.*

NOTES: (Cont.)

6. *For an Ib3 = 25 μadc measured in accordance with MIL-E-1C.*
7. *The deflection factor (for both D1-D2 and D3-D4 plate pairs separately) for a deflection of 75% of the minimum useful scan will not differ from the deflection factor at 25% of the minimum useful scan by more than the indicated value.*
8. *Centered with respect to the tube face and with the tube shielded.*
9. *Useful scan shall be ±2 Inches Min. from tube face center.*
10. *The deflection of one beam when balanced dc voltages are applied to the deflection electrodes of another beam will not be greater than the specified value.*
11. *The total horizontal movement on the left or right ends of a 3" horizontal trace (centered with respect to the tube face) deflected vertically 1.5" above and below the center of the tube face shall not exceed 0.075". The D1-D2 trace shall be considered horizontal.*
12. *The total vertical movement of the upper or lower ends of a 3" vertical trace centered on the tube face, deflected horizontally 1.5" to the left and right of the center of the tube face shall not exceed 0.075". The D3-D4 trace shall be considered vertical.*

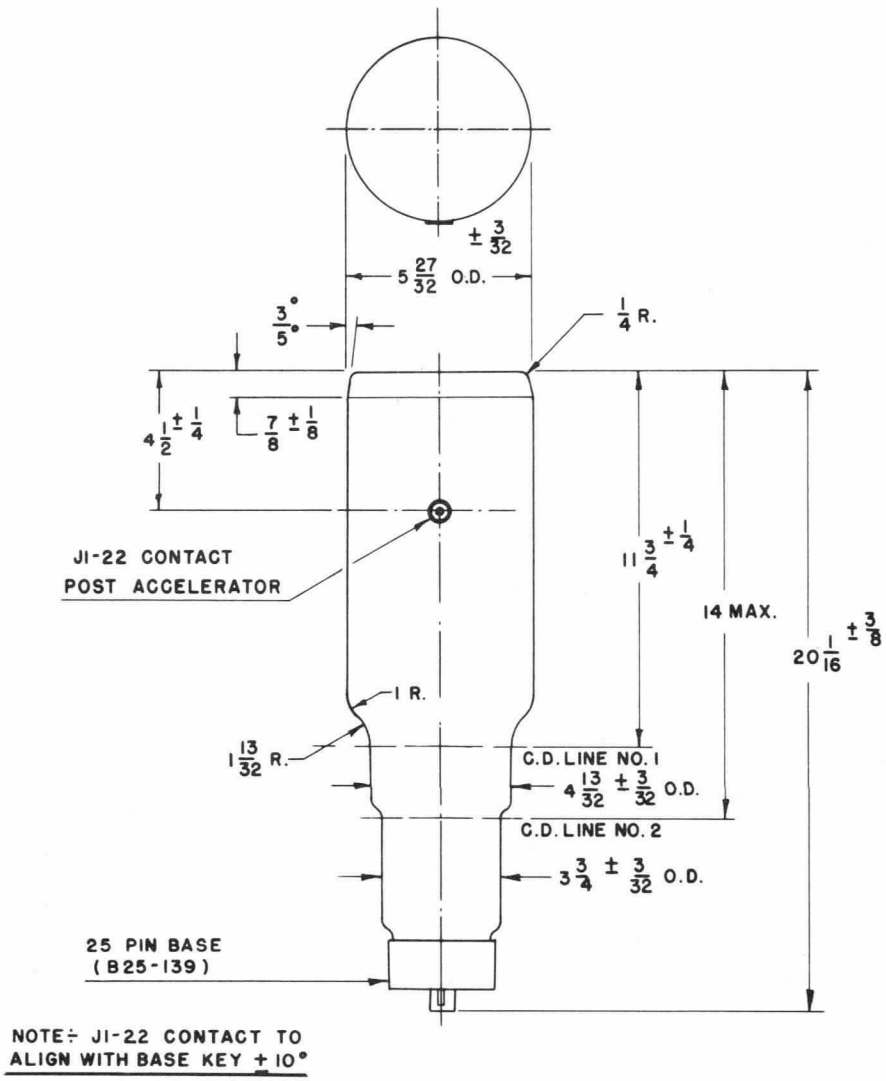

NOTE: J1-22 CONTACT TO ALIGN WITH BASE KEY ± 10°

S58037

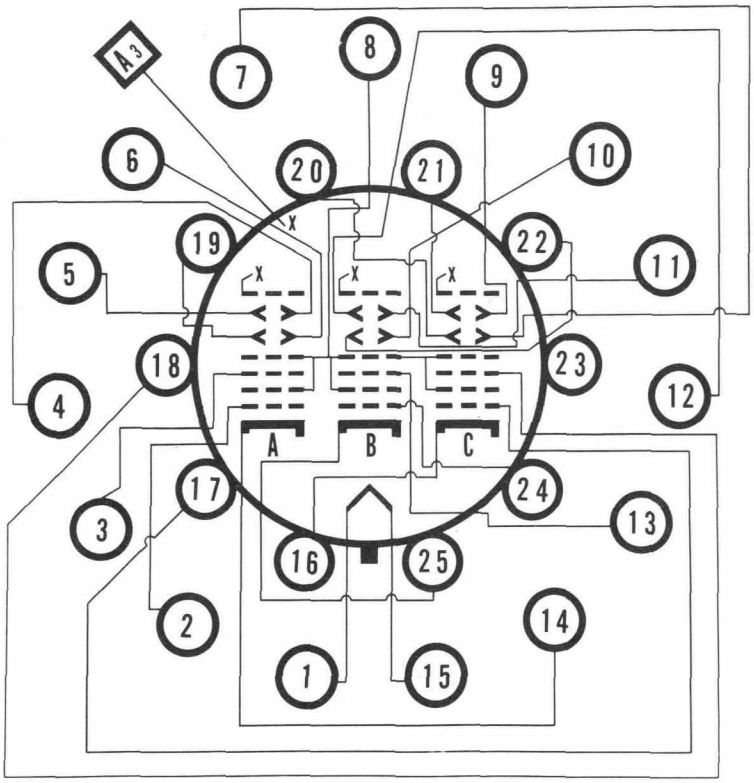

ELEMENTS COMMON TO ALL THREE GUNS

J1-22 (A3) Post Accelerator

Pin No. 8 Accelerator

Pins No. 1 & 15 Heater

GUN A

Pin No.	Element
2	Grid No. 1
3	Focusing Electrode
4	Deflector D2
5	Deflector D1
6	Deflector D3
14	Cathode
19	Deflector D4

GUN B

Pin No.	Element
10	Deflector D3
11	Deflector D2
12	Deflector D1
13	Focusing Electrode
22	Deflector D4
24	Grid No. 1
25	Cathode

GUN C

Pin No.	Element
7	Deflector D3
9	Deflector D2
16	Cathode
17	Grid No. 1
18	Focusing Electrode
20	Deflector D4
21	Deflector D1