Electronic TUBES

6CG7—8CG7

TWIN TRIODE

FOR GENERAL-PURPOSE AMPLIFIER AND OSCILLATOR APPLICATIONS

DESCRIPTION AND RATING

The 6CG7 is a miniature medium-mu twin triode suitable for use in a wide variety of general-purpose applications. It is particularly useful as a vertical-deflection oscillator and horizontal-deflection oscillator in television receivers. Like the 6SN7-GTB to which it is electrically equivalent, the tube may also be used as a resistance-coupled amplifier, phase inverter, or multivibrator.

Except for heater ratings, the 8CG7 is identical to the 6CG7. Both tubes exhibit a controlled heater-warm-up characteristic which makes them especially suited for use in television receivers that employ series-connected heaters.

GENERAL

ELECTRICAL

Cathode—Coated Unipotential	6CG7	8CG7
Heater Voltage, AC or DC	6.3	8.4 Volts
Heater Current	0.6	0.45 Amperes
Heater Warm-up Time*	11	11 Seconds

Direct Interelectrode Capacitances, approximate†

Grid to Plate, Each Section	4.0 μμf
Input, Each Section	2.3 μμf
Output, Each Section	2.2 μμf

MECHANICAL

Mounting Position—Any
Envelope—T-6½, Glass
Base—E9-1, Small Button 9-Pin

BASING DIAGRAM

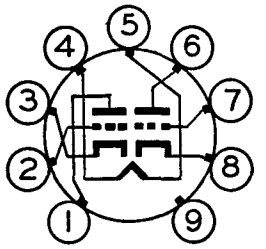

RETMA 9AJ

TERMINAL CONNECTIONS

Pin 1—Plate (Section 2)
Pin 2—Grid (Section 2)
Pin 3—Cathode (Section 2)
Pin 4—Heater
Pin 5—Heater
Pin 6—Plate (Section 1)
Pin 7—Grid (Section 1)
Pin 8—Cathode (Section 1)
Pin 9—Internal Shield

PHYSICAL DIMENSIONS

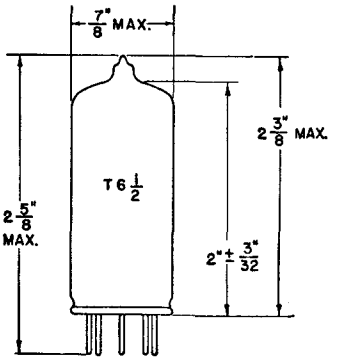

RETMA 6-3

GENERAL ELECTRIC

Supersedes ET-T941A, dated 12-55

MAXIMUM RATINGS

DESIGN-CENTER VALUES, EACH SECTION

	Class A_1 Amplifier	
DC Plate Voltage	300	Volts
Positive DC Grid Voltage	0	Volts
Plate Dissipation, Each Plate	3.5	Watts
Total Plate Dissipation, Both Plates	5.0	Watts
DC Cathode Current	20	Milliamperes
Heater-Cathode Voltage		
Heater Positive with Respect to Cathode		
DC Component	100	Volts
Total DC and Peak	200	Volts
Heater Negative with Respect to Cathode		
Total DC and Peak	200	Volts
Grid Circuit Resistance		
With Fixed Bias	1.0	Megohms

	Vertical-Oscillator Service‡	Horizontal-Oscillator Service‡	
DC Plate Voltage	300	300	Volts
Peak Negative Grid Voltage	400	600	Volts
Plate Dissipation, Each Plate	3.5	3.5	Watts
Total Plate Dissipation, Both Plates	5.0	5.0	Watts
DC Cathode Current	20	20	Milliamperes
Peak Cathode Current	70	300	Milliamperes
Heater-Cathode Voltage			
Heater Positive with Respect to Cathode			
DC Component	100	100	Volts
Total DC and Peak	200	200	Volts
Heater Negative with Respect to Cathode			
Total DC and Peak	200	200	Volts
Grid Circuit Resistance			
With Fixed Bias	2.2	2.2	Megohms
With Cathode Bias	2.2	2.2	Megohms

CHARACTERISTICS AND TYPICAL OPERATION

CLASS A_1 AMPLIFIER, EACH SECTION

Plate Voltage	90	250	250	Volts
Grid Voltage	0	−12.5	−8.0	Volts
Amplification Factor	20	.....	20	
Plate Resistance, approximate	6700	.....	7700	Ohms
Transconductance	3000	.....	2600	Micromhos
Plate Current	10	1.3	9.0	Milliamperes
Grid Voltage, approximate Ib = 10 Microamperes	−7	.....	−18	Volts

* The time required for the voltage across the heater to reach 80 percent of its rated value after applying 4 times rated heater voltage to a circuit consisting of the tube heater in series with a resistance equal to 3 times the rated heater voltage divided by the rated heater current.

† Without external shield.

‡ For operation in a 525-line, 30-frame television system as described in "Standards of Good Engineering Practice Concerning Television Broadcast Stations," Federal Communications Commission. The duty cycle of the voltage pulse must not exceed 15 percent of one scanning cycle.

CLASS A RESISTANCE-COUPLED AMPLIFIER

EACH SECTION

LOW IMPEDANCE DRIVE (APPROXIMATELY 200 OHMS)

R_L	R_{gf}	Ebb = 90 Volts			Ebb = 180 Volts			Ebb = 300 Volts		
		R_k	E_o	Gain	R_k	E_o	Gain	R_k	E_o	Gain
0.10	0.10	2600	11	14	2100	28	15	2000	49	16
0.10	0.24	3200	15	16	2700	36	16	2600	65	17
0.24	0.24	6200	12	15	5000	27	16	4700	53	17
0.24	0.51	7400	16	16	6300	37	16	6000	66	17
0.51	0.51	14000	13	15	12000	30	16	11000	54	16
0.51	1.0	17000	16	15	15000	36	16	13000	56	16

HIGH IMPEDANCE DRIVE (APPROXIMATELY 100K OHMS)

R_L	R_{gf}	Ebb = 90 Volts			Ebb = 180 Volts			Ebb = 300 Volts		
		R_k	E_o	Gain	R_k	E_o	Gain	R_k	E_o	Gain
0.10	0.10	3400	13	14	2700	29	15	2500	51	15
0.10	0.24	4300	17	15	3600	37	16	3400	67	16
0.24	0.24	8100	15	14	6500	32	15	6100	57	16
0.24	0.51	9900	18	15	8400	40	16	8000	71	16
0.51	0.51	16000	15	14	13000	32	16	12000	59	16
0.51	1.0	21000	19	15	18000	41	16	16000	73	16

Notes:

1. E_o is maximum RMS voltage output for approximately five percent total harmonic distortion.
2. Gain is measured for an output voltage of two volts RMS.
3. R_k is in ohms; R_L and R_{gf} are in megohms.
4. Coupling capacitors (C) should be selected to give desired frequency response. R_k should be adequately by-passed.

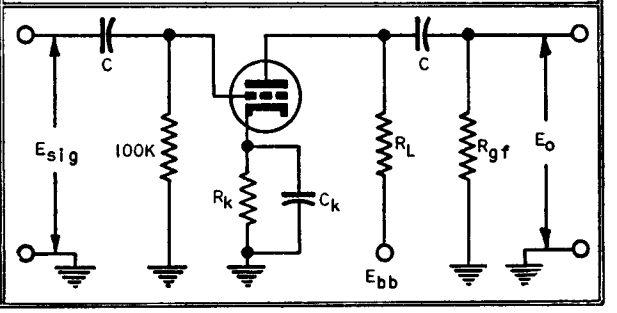

AVERAGE PLATE CHARACTERISTICS

EACH SECTION

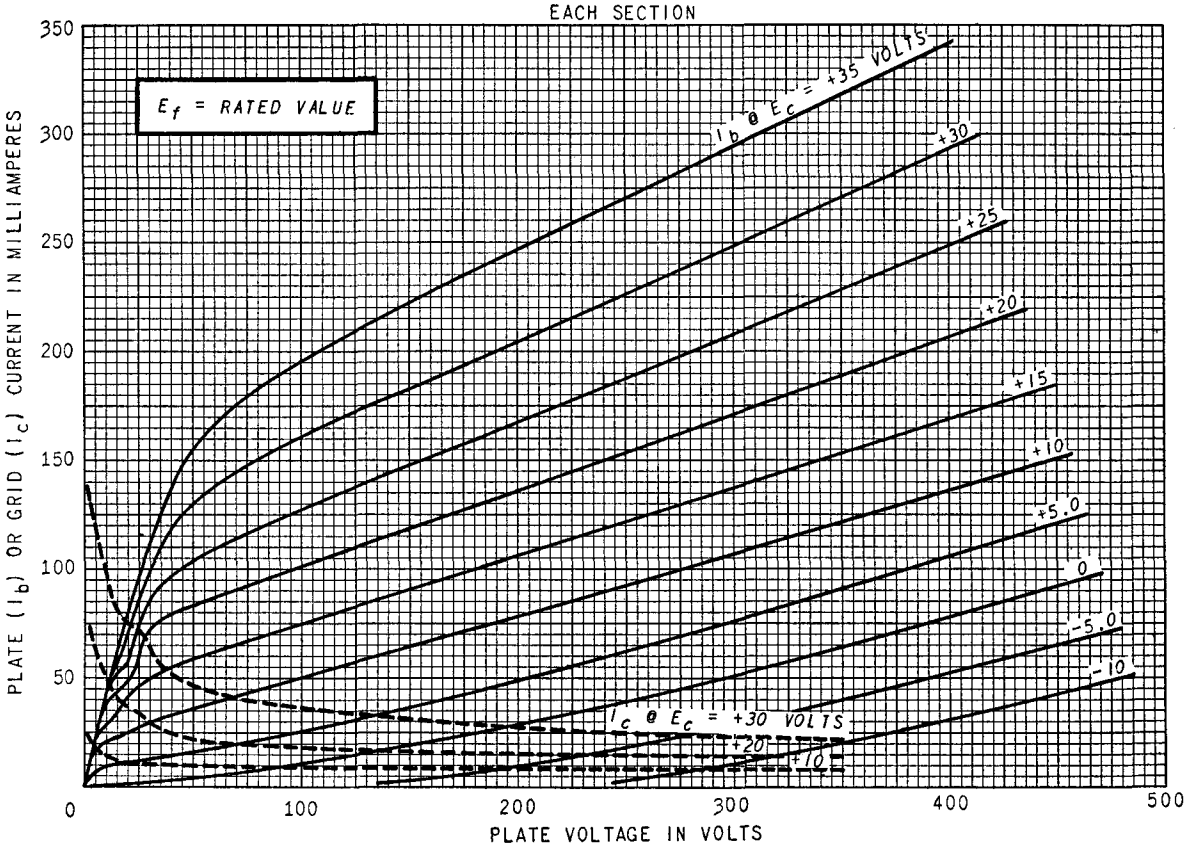

AVERAGE PLATE CHARACTERISTICS

EACH SECTION

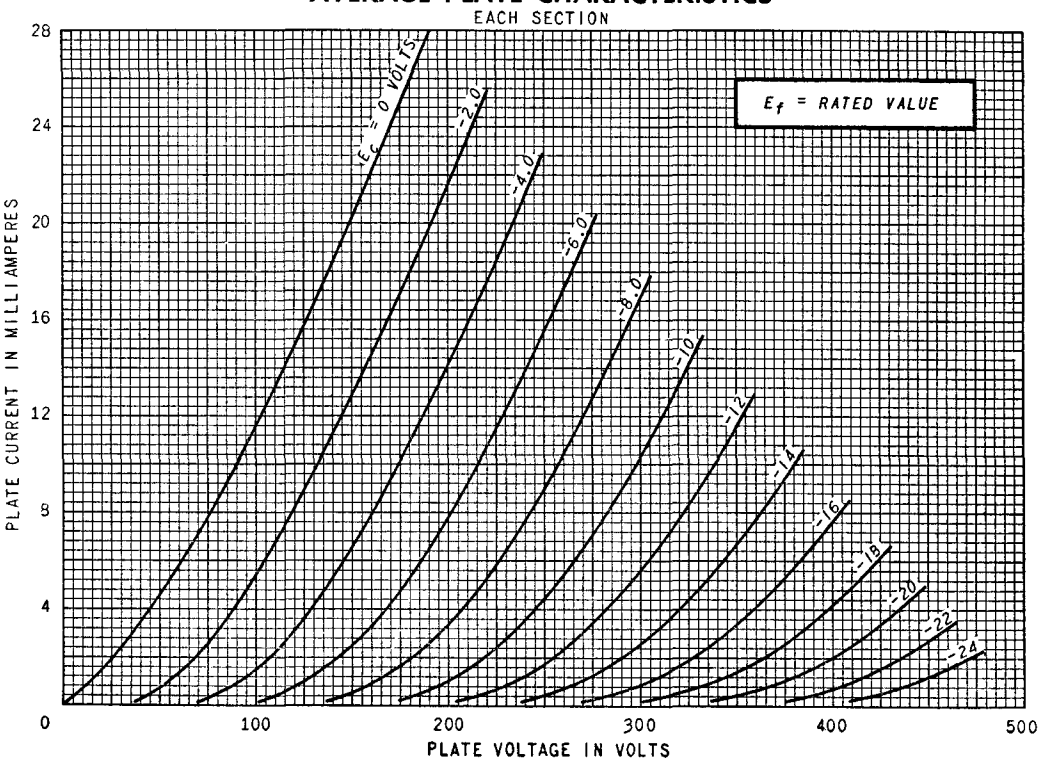

AVERAGE TRANSFER CHARACTERISTICS

EACH SECTION

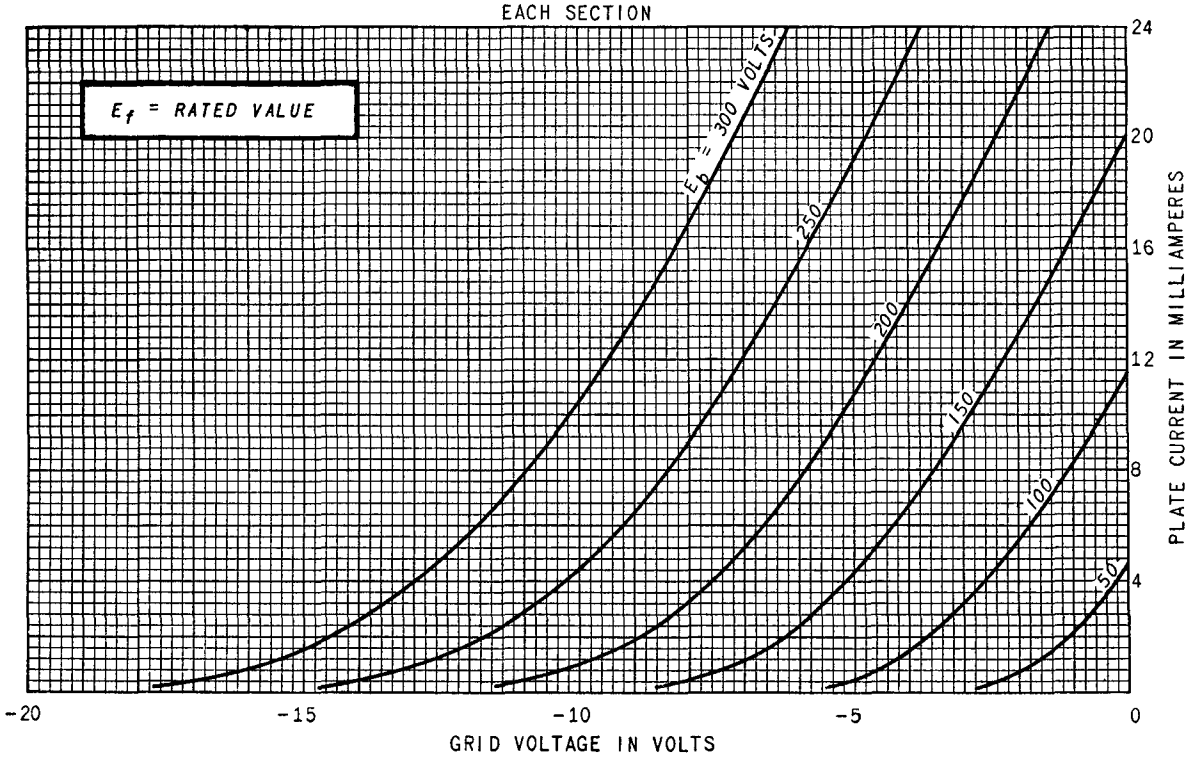

AVERAGE CHARACTERISTICS
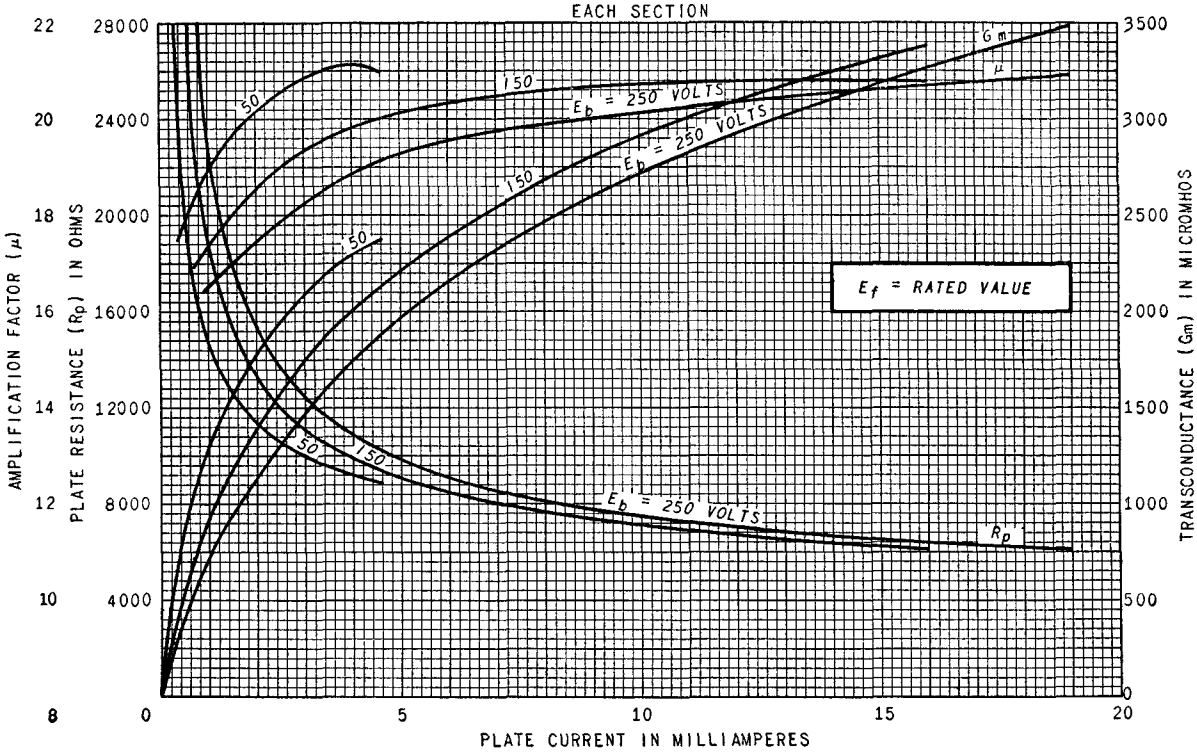
EACH SECTION