TUNG-SOL

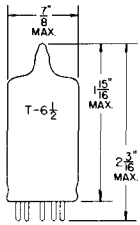

GLASS BULB

TWIN TRIODE

MINIATURE TYPE

COATED UNIPOTENTIAL CATHODE

HEATER

6.3 VOLTS 0.4 AMP.

AC OR DC

ANY MOUNTING POSITION

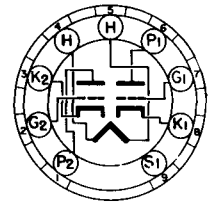

BOTTOM VIEW

MINIATURE BUTTON
9 PIN BASE

9AJ

THE 6BZ8 IS A MEDIUM MU TWIN TRIODE IN THE 9 PIN MINIATURE CONSTRUCTION. IT IS DESIGNED FOR USE IN LOW NOISE VHF AMPLIFIER CASCODE OPERATION WITH THE SECTION #1 AS THE INPUT SECTION OF THE CASCODE CIRCUIT. WITH THE EXCEPTION OF HEATER WARM-UP TIME AND HEATER CHARACTERISTICS, THE 6BZ8 IS IDENTICAL TO THE 4BZ8.

DIRECT INTERELECTRODE CAPACITANCES

WITH EXTERNAL SHIELD #315

	#1 TRIODE	#2 TRIODE	
GRID TO PLATE (G TO P)	1.15	---	μμf
PLATE TO CATHODE (P TO K)	---	0.15	μμf
#1 TRIODE PLATE TO #2 TRIODE PLATE P_1 TO P_2	.010	---	μμf

RATINGS

INTERPRETED ACCORDING TO DESIGN CENTER SYSTEM

EACH SECTION

HEATER VOLTAGE	6.3	VOLTS
MAXIMUM HEATER-CATHODE VOLTAGE		
HEATER POSITIVE WITH RESPECT TO CATHODE	200	VOLTS
HEATER NEGATIVE WITH RESPECT TO CATHODE	200	VOLTS
MAXIMUM PLATE VOLTAGE	250	VOLTS
MAXIMUM PLATE DISSIPATION	2.2	WATTS
MAXIMUM CATHODE CURRENT	20	MA.
MAXIMUM GRID CIRCUIT RESISTANCE	0.1	MEGOHM

TYPICAL OPERATING CONDITIONS AND CHARACTERISTICS

CLASS A_1 AMPLIFIER - EACH SECTION

HEATER VOLTAGE	6.3	VOLTS
HEATER CURRENT	0.4	AMP.
PLATE VOLTAGE	125	VOLTS
CATHODE RESISTOR	100	OHMS
PLATE RESISTANCE	5 600	OHMS
TRANSCONDUCTANCE	8 000	μMHOS
AMPLIFICATION FACTOR	45	
PLATE CURRENT	10	MA.
GRID VOLTAGE (APPROX.) FOR G_m = 50 μMHOS	-13	VOLTS
CASCODE TRANSCONDUCTANCE (E_b 250V E_{c1} -0.5V)	10 000	μMHOS
CASCODE PLATE CURRENT (E_b 250V E_{c1} -0.5V)	15	MA.

CONTINUED ON FOLLOWING PAGE

TUNG-SOL

CONTINUED FROM PRECEDING PAGE
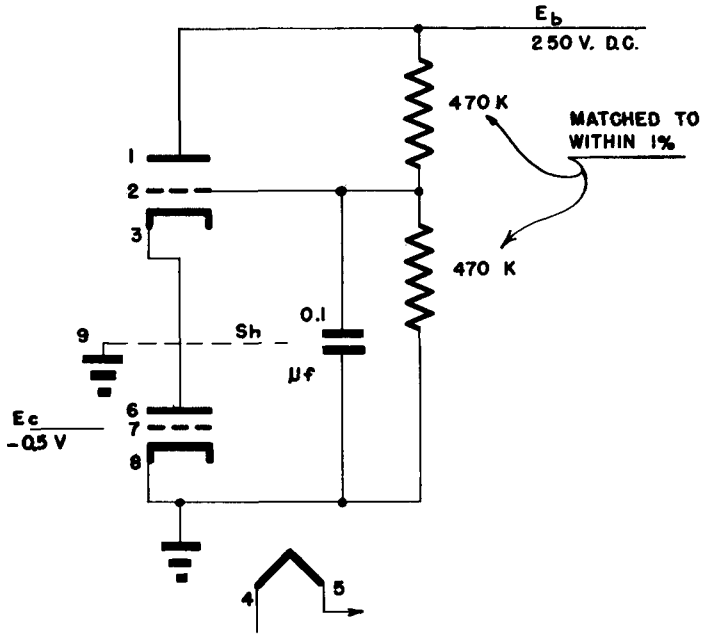
CASCODE TRANSCONDUCTANCE TEST CIRCUIT