TUNG-SOL

DOUBLE TRIODE

MINIATURE TYPE

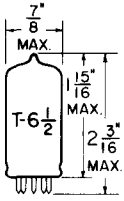

GLASS BULB

COATED UNIPOTENTIAL CATHODE

HEATER
6.3 VOLTS 0.4 AMP.
AC OR DC

ANY MOUNTING POSITION

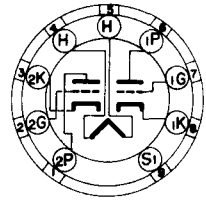

BOTTOM VIEW
MINIATURE BUTTON
9 PIN NOVAL
9AJ

THE 6BQ7A IS A MEDIUM-MU DOUBLE TRIODE USING THE 9 PIN MINIATURE CONSTRUCTION. IT IS INTENDED FOR USE AS THE FIRST RF AMPLIFIER TUBE IN TUNERS OF VHF TELEVISION RECEIVERS OR AS A LOW NOISE IF PRE-AMPLIFIER TUBE IN UHF TELEVISION RECEIVERS EMPLOYING A CRYSTAL MIXER. HIGH TRANSCONDUCTANCE, LOW INPUT CAPACITANCE, LOW INPUT LOADING AND LOW PLATE TO CATHODE CAPACITANCE MAKES IT ESPECIALLY USEFUL IN THE DIRECT-COUPLED RF STAGE OF TELEVISION RECEIVERS UTILIZING A DRIVEN RF-GROUNDED-GRID AMPLIFIER OR THE CASCODE TYPE OF CIRCUIT.

DIRECT INTERELECTRODE CAPACITANCES

WITH EXTERNAL SHIELD #315

	UNIT #1	UNIT #2	
GRID TO PLATE	1.15	1.15	μμf
INPUT	2.85	----	μμf
INPUT (GROUNDED GRID)	----	4.95	μμf
OUTPUT	1.35	----	μμf
OUTPUT (GROUNDED GRID)	----	2.27	μμf
PLATE TO CATHODE (MAX.)	0.15	0.15	μμf
HEATER TO CATHODE	2.65	2.70	μμf
PLATE OF UNIT #1 TO PLATE OF UNIT #2 (MAX.)	0.010		μμf
PLATE OF UNIT #2 TO PLATE AND GRID OF UNIT #1 (MAX.)	0.024		μμf

RATINGS

INTERPRETED ACCORDING TO RMA STANDARD M8-210

CLASS A_1 AMPLIFIER – EACH TRIODE UNIT

	DESIGN CENTER VALUES	
HEATER VOLTAGE	6.3	VOLTS
MAXIMUM HEATER CATHODE VOLTAGE:		
HEATER NEGATIVE WITH RESPECT TO CATHODE	200[A]	VOLTS
HEATER POSITIVE WITH RESPECT TO CATHODE	200	VOLTS
MAXIMUM PLATE VOLTAGE	250[A]	VOLTS
MAXIMUM PLATE DISSIPATION	2	WATTS
MAXIMUM CATHODE CURRENT	20	MA.
MAXIMUM GRID CIRCUIT RESISTANCE	0.5	MEGOHM

[A] UNDER CUT-OFF CONDITIONS, IN RF-GROUNDED-GRID CIRCUITS WITH DIRECT-COUPLED DRIVE, IT IS PERMISSIBLE FOR THIS VOLTAGE TO BE AS HIGH AS 300 VOLTS.

CONTINUED ON FOLLOWING PAGE

PRINTED IN U.S.A.

CONTINUED FROM PRECEDING PAGE

TYPICAL OPERATING CONDITIONS AND CHARACTERISTICS

CLASS A_1 AMPLIFIER – EACH UNIT

	DESIGN CENTER VALUES	
HEATER VOLTAGE	6.3	VOLTS
HEATER CURRENT	0.4	AMP.
PLATE VOLTAGE	150	VOLTS
CATHODE BIAS RESISTOR	220	OHMS
AMPLIFICATION FACTOR	39	
PLATE RESISTANCE	6 100	OHMS
TRANSCONDUCTANCE	6 400	µMHOS
PLATE CURRENT	9	MA.
GRID VOLTS (APPROX.) FOR I_b = 10 µAMP.	-10	VOLTS

PUSH-PULL RF GROUNDED GRID CIRCUIT – EACH UNIT

HEATER VOLTAGE	6.3	VOLTS
HEATER CURRENT	0.4	AMP.
PLATE VOLTAGE	150	VOLTS
GRID VOLTAGE (OBTAINED FROM CATHODE RESISTOR)	-2	VOLTS
CATHODE RESISTOR (COMMON TO BOTH UNITS)	100	OHMS
PLATE CURRENT	10	MA.

RF GROUNDED GRID CIRCUIT WITH DIRECT-COUPLED DRIVE

UNIT #1 (DRIVER TUBE) IS DIRECTLY COUPLED TO UNIT #2 (DRIVEN RF-GROUNDED-GRID AMPLIFIER TUBE) AS SHOWN IN ACCOMPANYING CIRCUIT.

	UNIT #1	UNIT #2	
HEATER VOLTAGE	6.3	6.3	VOLTS
HEATER CURRENT	0.4	0.4	AMP.
PEAK HEATER CATHODE VOLTAGE: HEATER NEGATIVE WITH RESPECT TO CATHODE	1	250	VOLTS
PLATE SUPPLY VOLTAGE	250	250	VOLTS
PLATE VOLTAGE	135	115	VOLTS
GRID VOLTAGE	-1	---	VOLTS
GRID RESISTOR	---	0.5	MEGOHM
PLATE CURRENT	10	10	MA.
GRID CURRENT	0	0	MA.
GRID VOLTAGE (APPROX.) FOR I_b = 10 µAMP.	-14	---	VOLTS

→INDICATES A CHANGE.

TUNG-SOL

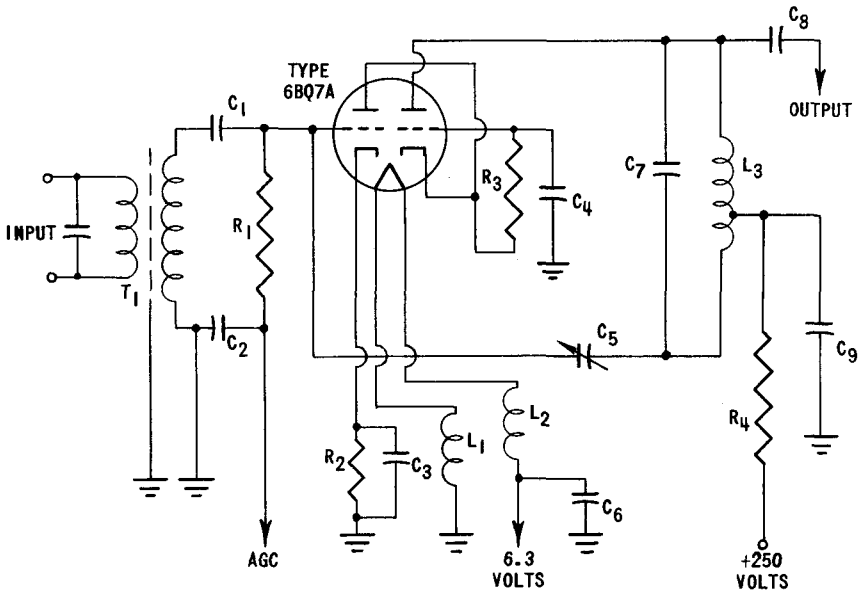

C1: 33 uuf, 400 VOLTS
C2: 1000 uuf, 400 VOLTS
C3: 1000 uuf, 400 VOLTS
C4: 1000 uuf, 400 VOLTS
C5: 0.5 to 1.5 uuf, 400 VOLTS
C6: 1000 uuf, 400 VOLTS
C7: 2 uuf, 400 VOLTS
C8: 33 uuf, 400 VOLTS
C9: 1000 uuf, 400 VOLTS

L1, L2: BIFILAR CHOKES, EACH 10 TURNS NO. 18 ENAMEL WIRE 1/4" COIL FORM
L3: TUNED CIRCUIT ELEMENT OF TUNER. VALUE DEPENDS ON DISTRIBUTED CIRCUIT CAPACITANCES. TO DETERMINE TAP POINT, TAP DOWN TO 80 TO 90% OF TOTAL NUMBER OF TURNS

R1: 10000 OHMS, 0.5 WATT
R2: 100 OHMS, 0.5 WATT
R3: 500000 OHMS, 0.5 WATT
R4: 100 OHMS, 0.5 WATT
T1: TUNED CIRCUIT ELEMENT OF TUNER. VALUE DEPENDS ON DISTRIBUTED CIRCUIT CAPACITANCES.

DRIVEN RF-GROUNDED GRID AMPLIFIER CIRCUIT WITH DIRECT COUPLED DRIVE

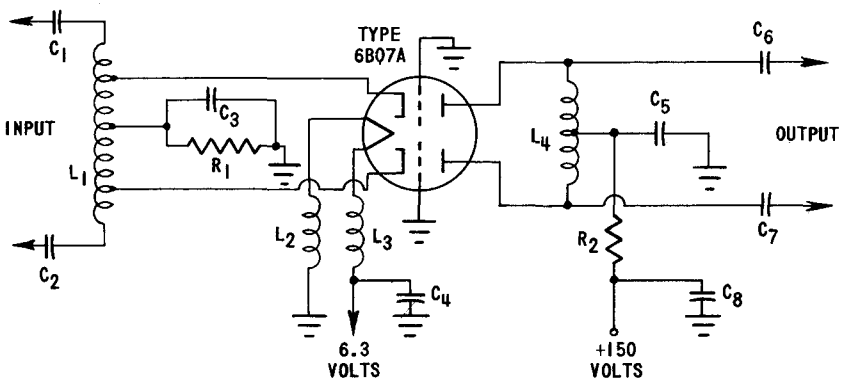

C1 C2 C3 C4 C5:
1000 uuf, 400 VOLTS
C6 C7:
100 uuf, 400 VOLTS
C8: 1000 uuf, 400 VOLTS

L1 L4: TUNED CIRCUIT ELEMENTS OF TUNER. VALUES DEPEND ON DISTRIBUTED CIRCUIT CAPACITANCES.

L2 L3: BIFILAR CHOKES, EACH 10 TURNS OF NO. 18 ENAMEL WIRE, 1/4" COIL FORM.
R1 R2: 100 OHMS, 0.5 WATT

PUSH-PULL RF GROUNDED-GRID CIRCUIT

PRINTED IN U. S. A.

6BQ7A

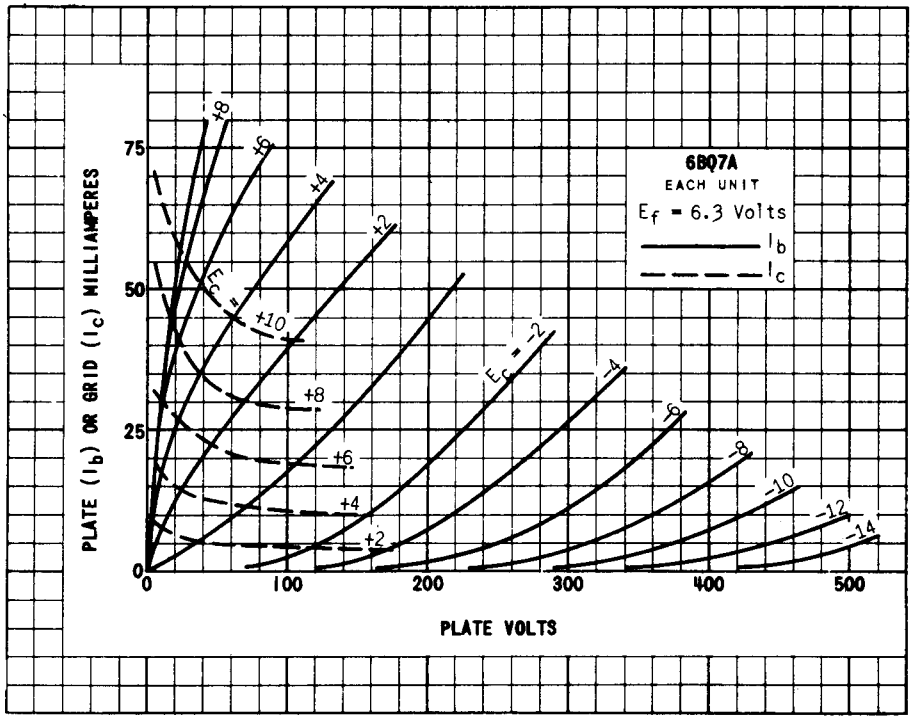
6BQ7A
EACH UNIT
E_f = 6.3 Volts
I_b
I_c
PLATE (I_b) OR GRID (I_c) MILLIAMPERES
PLATE VOLTS
0
25
50
75
100
200
300
400
500
+8
+6
+4
+2
E_c = +10
+8
+6
+4
+2
E_c = -2
-4
-6
-8
-10
-12
-14

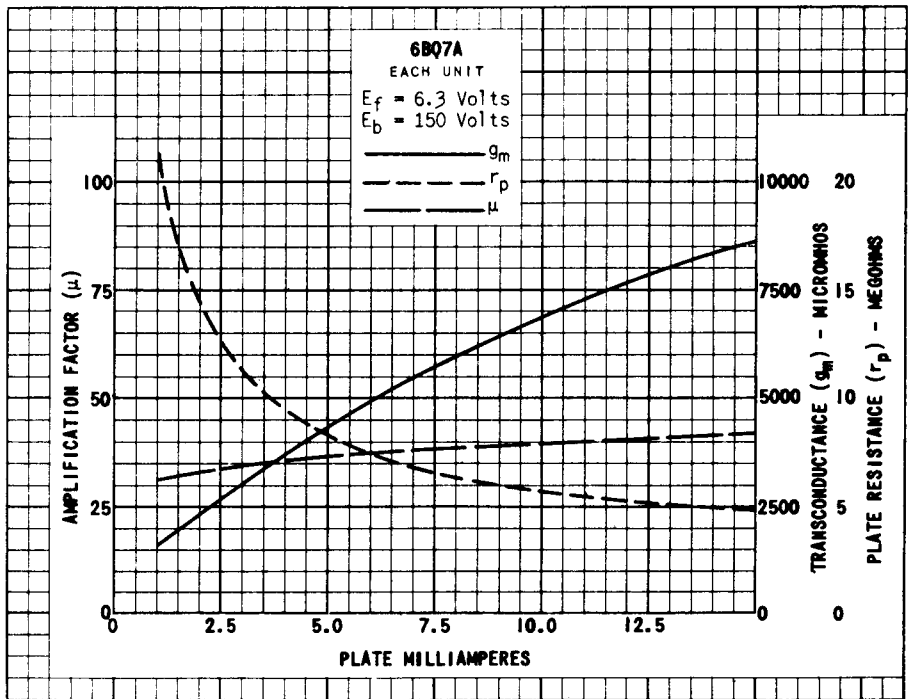
6BQ7A
EACH UNIT
E_f = 6.3 Volts
E_b = 150 Volts
g_m
r_p
μ
AMPLIFICATION FACTOR (μ)
TRANSCONDUCTANCE (g_m) - MICROMHOS
PLATE RESISTANCE (r_p) - MEGOHMS
PLATE MILLIAMPERES
0
25
50
75
100
2.5
5.0
7.5
10.0
12.5
2500
5000
7500
10000
5
10
15
20

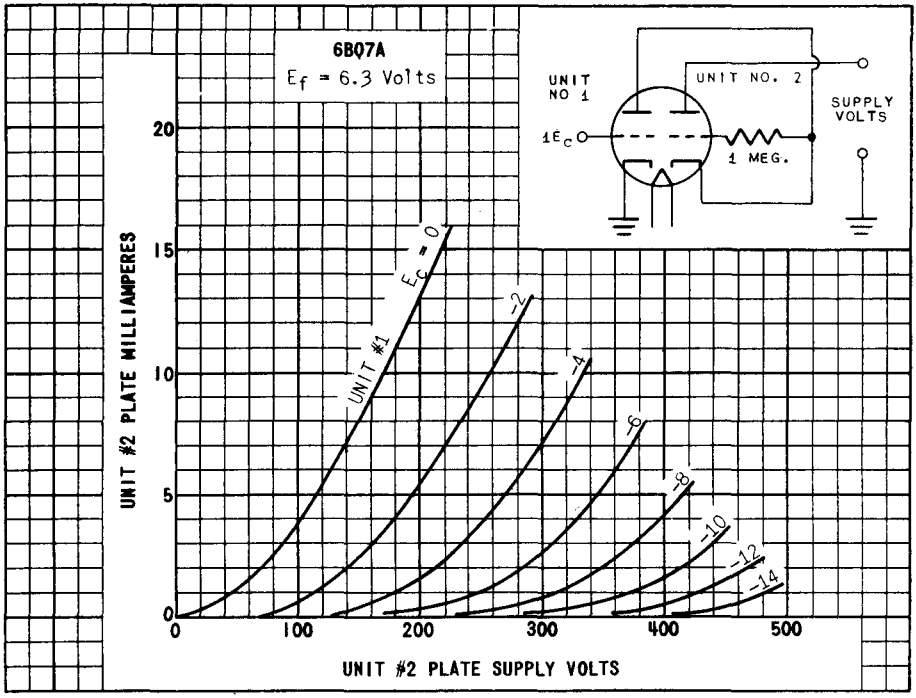
6BQ7A
Ef = 6.3 Volts
UNIT NO 1
UNIT NO. 2
SUPPLY VOLTS
1Ec
1 MEG.
UNIT #2 PLATE MILLIAMPERES
UNIT #2 PLATE SUPPLY VOLTS
UNIT #1
Ec = 0
-2
-4
-6
-8
-10
-12
-14
0
5
10
15
20
0
100
200
300
400
500

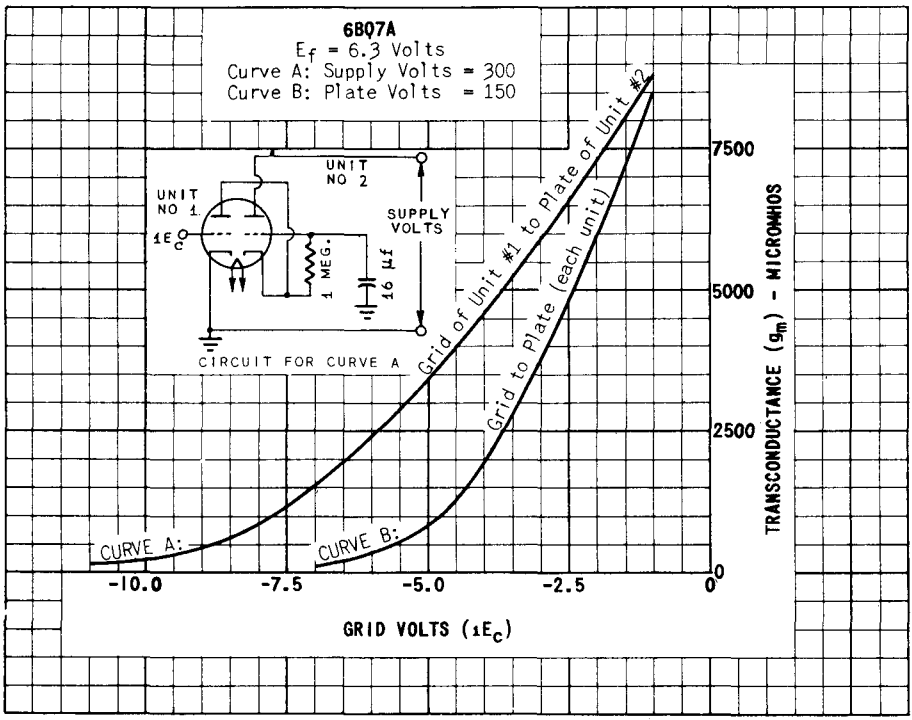
6BQ7A
Ef = 6.3 Volts
Curve A: Supply Volts = 300
Curve B: Plate Volts = 150
UNIT NO 1
UNIT NO 2
SUPPLY VOLTS
1Ec
1 MEG.
16 µf
CIRCUIT FOR CURVE A
Grid of Unit #1 to Plate of Unit #2
Grid to Plate (each unit)
CURVE A:
CURVE B:
TRANSCONDUCTANCE (gm) - MICROMHOS
GRID VOLTS (1Ec)
0
2500
5000
7500
-10.0
-7.5
-5.0
-2.5
0