MECHANICAL DATA

Base	A4-76, Peewee 4 Pin
Cap	C1-3, Skirted Miniature
Cooling	Convection and Conduction. Contact rings are to make direct peripheral contact with metallic parts of the external cavity.
Mounting Position	Any

Connections:

Pin 1 — Control Electrode	Lower Contact Ring — 1st Resonator
Pin 2 — Heater	Upper Contact Ring — 2nd Resonator
Pin 3 — Cathode	Cap — Reflector
Pin 4 — Heater	

ELECTRICAL DATA

HEATER CHARACTERISTICS

Heater Voltage, AC or DC (±8%)	6.3 Volts
Heater Current	750 Ma

RATINGS (Absolute Values)

Resonator Voltage	350 Volts	dc Max.
Resonator Current	35 Ma	dc Max.
Reflector Voltage	−750 Volts	dc Max.
	−15 Volts	dc Min.
Control Electrode Voltage	+1 Volt	dc Max.
	−500 Volts	dc Max.
Heater-Cathode Voltage	±45 Volts	dc Max.
Power Input	12 Watts	Max.
Seal Temperature	175°C	Max.

GENERAL

Reflector Mode	1-3/4	2-3/4	3-3/4	
Frequency	4000	4500	6500	Mc
	1600	2100	3600	Mc

TYPICAL OPERATION

CW Oscillator, Fig. 1

Reflector Mode	1-3/4	2-3/4	3-3/4	
Cavity Mode	3/4	3/4	5/4	
Frequency	2800	3200	5000	Mc
Resonator Voltages	325	325	325	Volts
Cathode Current	28	26	25	Ma
Reflector Voltage (approx.)	−220	−120	−220	Volts
Power Output	250	100	60	Mw
Electronic Tuning Range (Between Half Power Points)	6	6	6	Mc

APPLICATION DATA

The Sylvania Type 6BL6 is a broadband reflex klystron designed for cw operation. In conjunction with external cavity resonators, this tube operates over the frequency range from 550 to 3800 megacycles in three modes. The 6BL6 is particularly adapted for use in signal generators, spectrum analyzers or local oscillator applications where broadband frequency coverage is needed.

QUICK REFERENCE DATA

The Sylvania Type 6BL6 is a broadband reflex klystron, 1600 to 6500 Mc. It is designed for service as a CW oscillator using an external cavity.

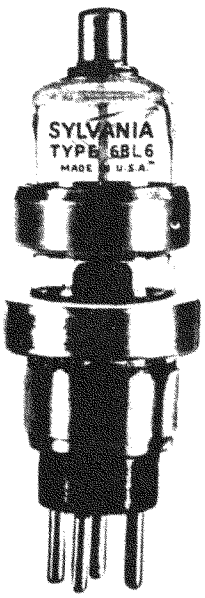

SYLVANIA ELECTRIC PRODUCTS INC.

ELECTRONICS DIVISION
WOBURN, MASS.

Prepared and Released By The TECHNICAL PUBLICATIONS SECTION EMPORIUM, PENNSYLVANIA

5-5-(-8-)

APPLICATION DATA

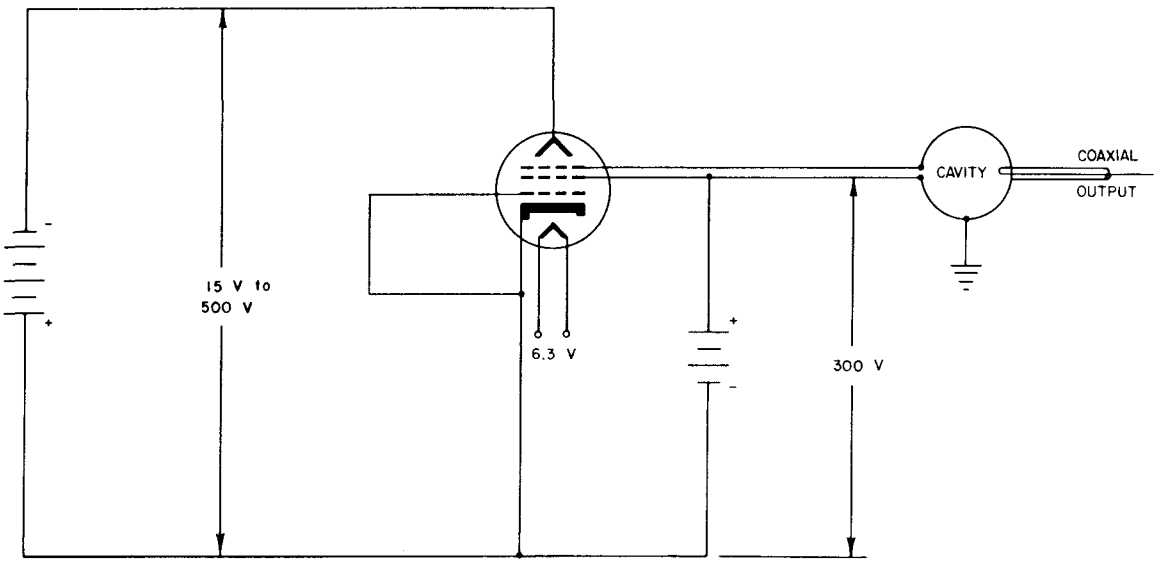

FIG. 1 — CW OSCILLATOR CIRCUIT EMPLOYING THE 6BL6 REFLEX KLYSTRON

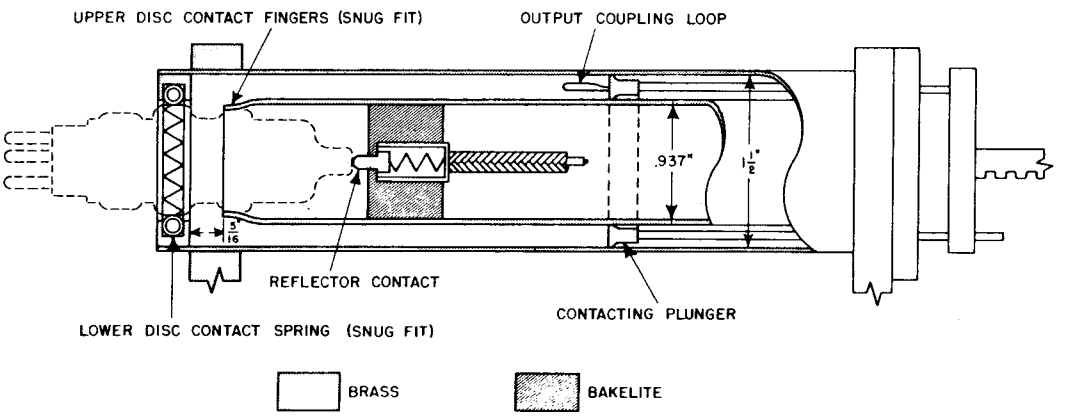

Recess in Contact Plunger	1/2"	Loop Size for 3000-5000 mc	9/32"
Loop Size for 800-3500 mc	9/16"	Loop Width for Both Ranges	.175"

The length is determined by the frequency of operation and the range of plunger motion is set by the frequency band to be covered.

FIG. 2 — DIAGRAM OF A TYPICAL COAXIAL CAVITY FOR USE WITH THE 6BL6 SHOWING ESSENTIAL DIMENSIONS

AVERAGE CHARACTERISTICS

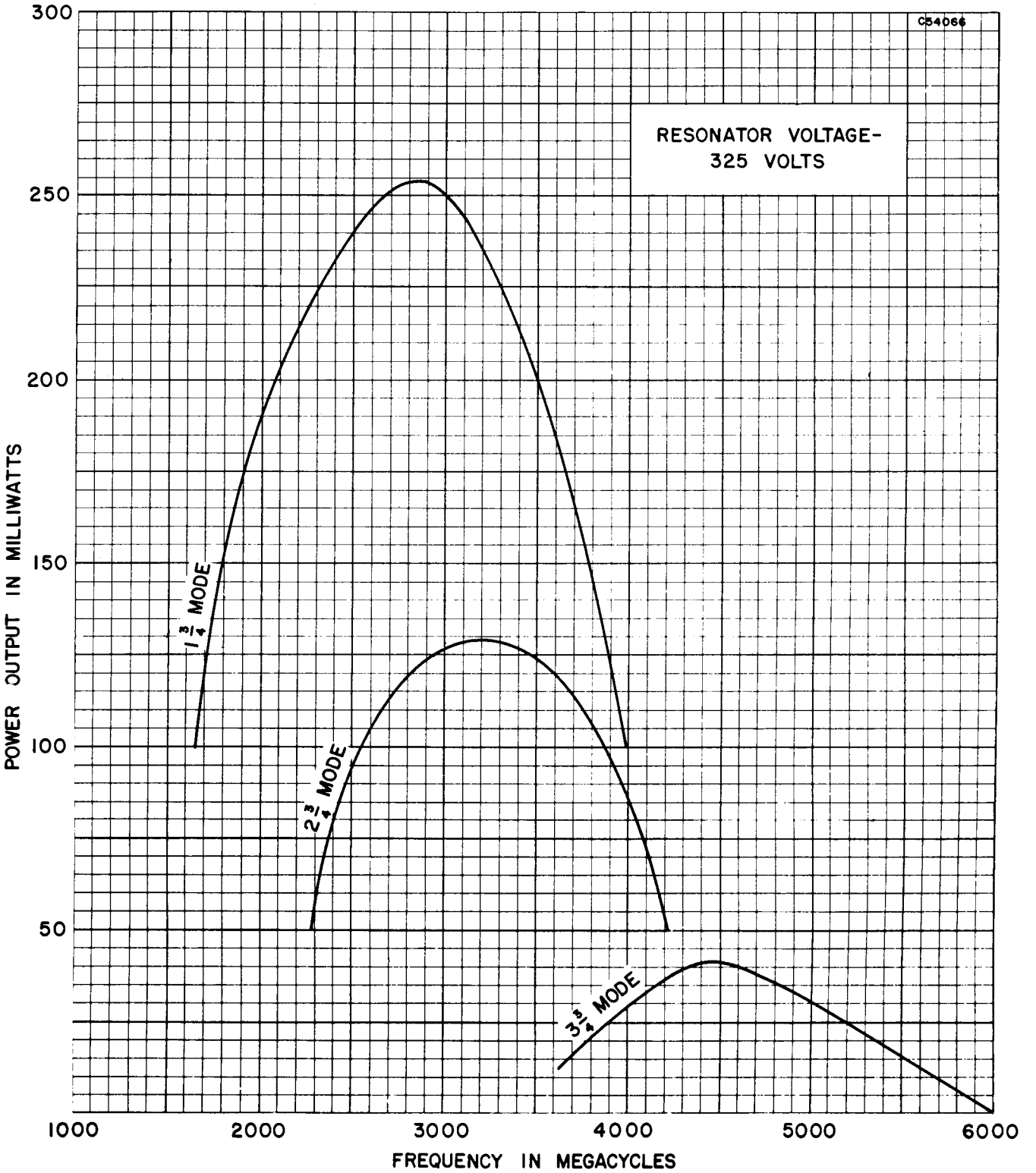

AVERAGE CHARACTERISTICS

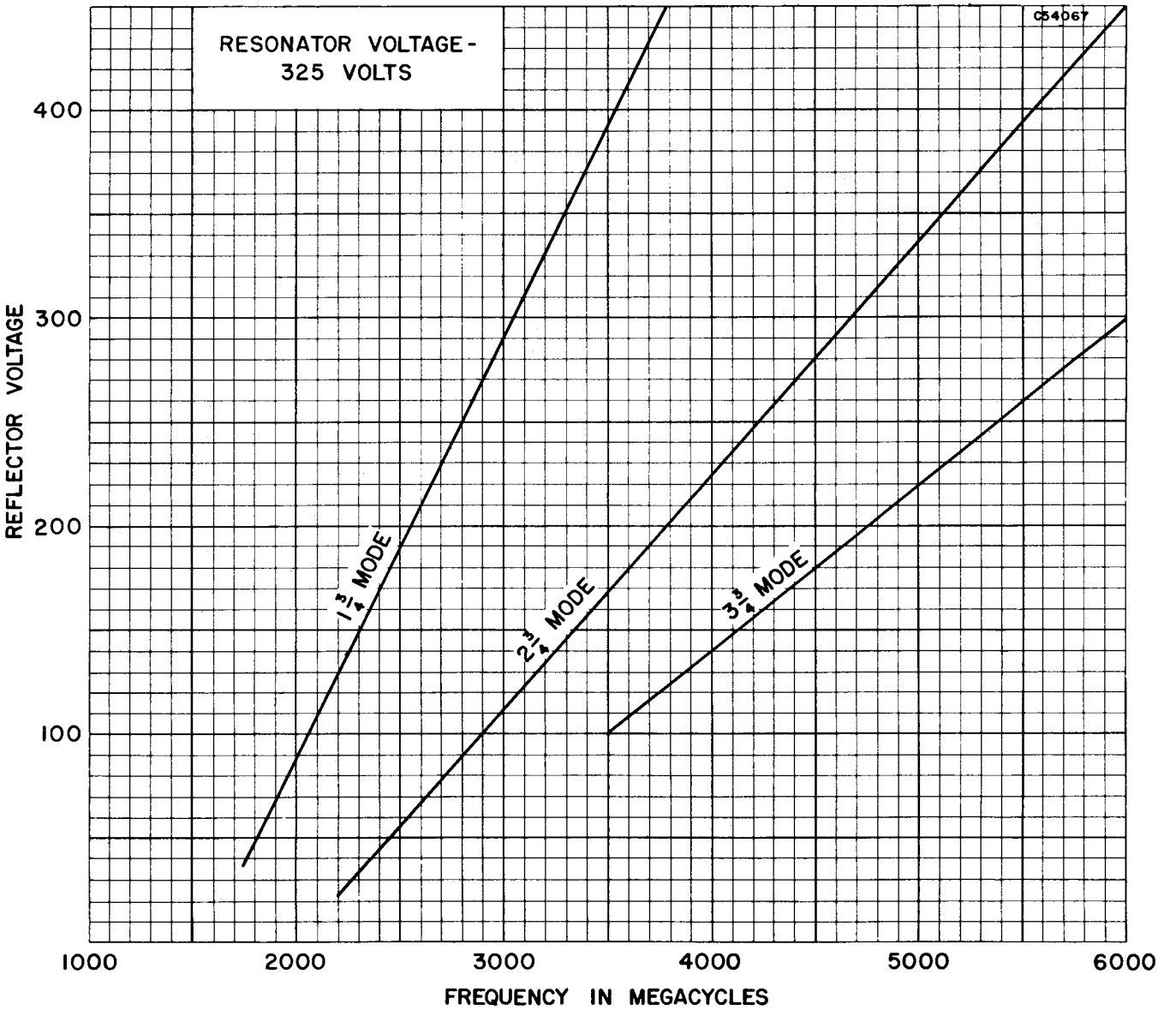
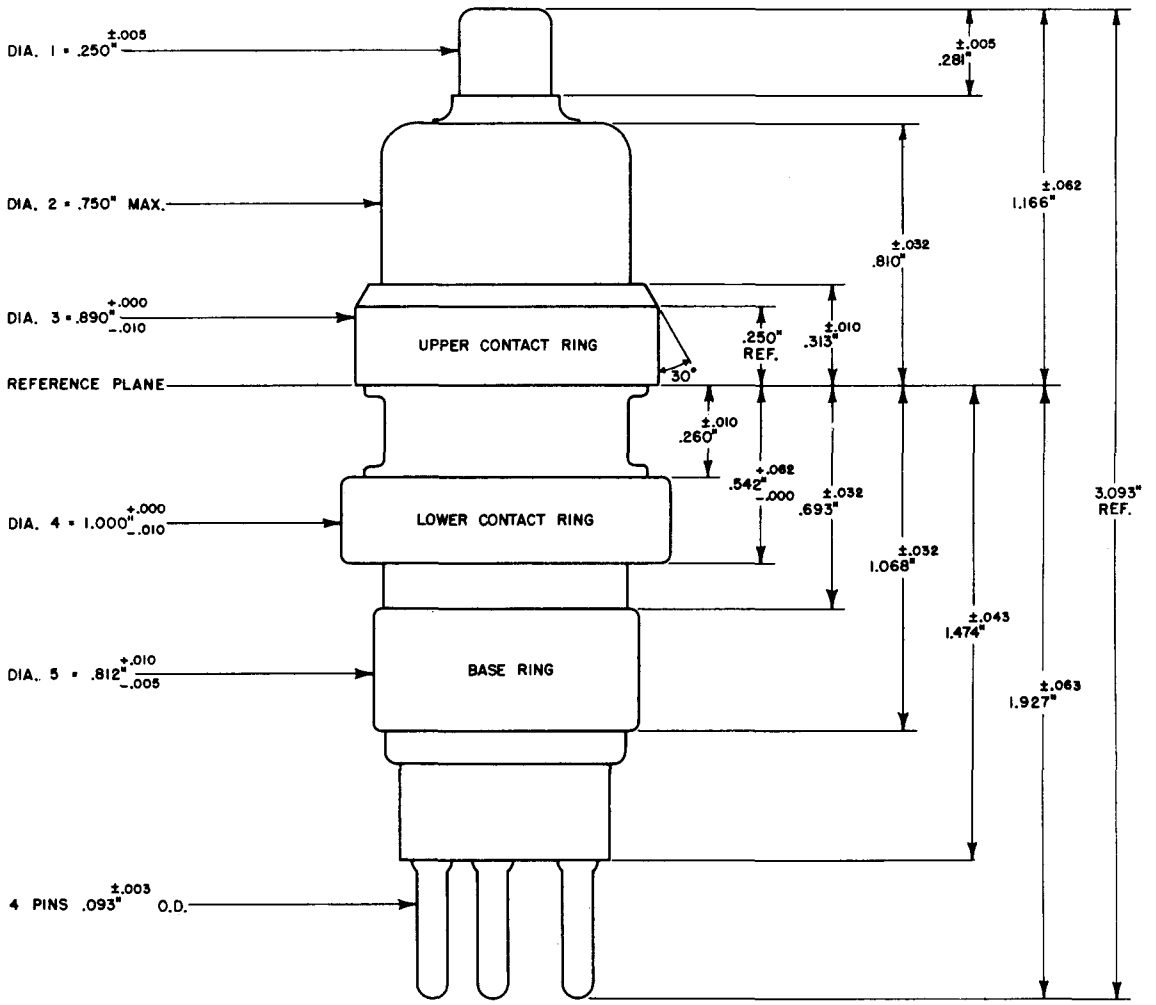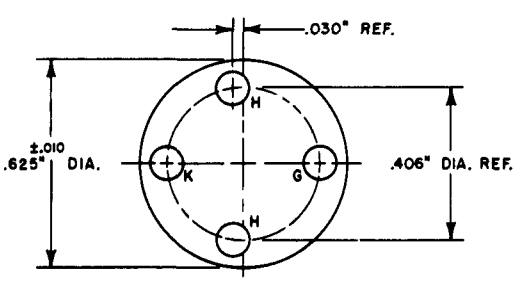
OUTLINE DRAWING