TUNG-SOL

DOUBLE TRIODE

MINIATURE TYPE

COATED UNIPOTENTIAL CATHODE

HEATER

SERIES	PARALLEL
6.3 VOLTS	3.15 VOLTS
0.3 AMP.	0.6 AMP.

AC OR DC

ANY MOUNTING POSITION

FOR 12.6 VOLT OPERATION APPLY HEATER VOLTAGE BETWEEN PINS #4 AND #5. FOR 6.3 VOLT OPERATION APPLY HEATER VOLTAGE BETWEEN PIN #9 AND PINS #4 AND #5 CONNECTED TOGETHER.

CONTROL OF HEATER CHARACTERISTICS APPLIES ONLY TO 600 MA. HEATER CONNECTION.

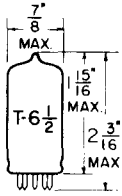

GLASS BULB

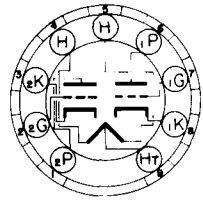

BOTTOM VIEW

SMALL BUTTON
9 PIN BASE

9A

THE 6AX7 COMBINES TWO COMPLETELY INDEPENDENT HIGH-MU TRIODES IN THE SMALL 9 PIN BUTTON CONSTRUCTION AND IS DESIGNED FOR USE IN 600 MA. SERIES HEATER OPERATED RECEIVERS. IT IS ADAPTABLE TO APPLICATIONS WHERE HIGH VOLTAGE GAIN AND LOW HEATER POWER ARE THE IMPORTANT CONSIDERATION, SUCH AS VOLTAGE AMPLIFIERS; PHASE INVERTERS AND MULTIVIBRATORS. THERMAL CHARACTERISTICS OF THE HEATER ARE CONTROLLED SUCH THAT HEATER VOLTAGE SURGES DURING THE WARM-UP CYCLE ARE MINIMIZED PROVIDED IT IS USED WITH OTHER TYPES WHICH ARE SIMILARLY CONTROLLED. WITH THE EXCEPTION OF HEATER RATINGS, ITS CHARACTERISTICS ARE IDENTICAL TO THE 12AX7.

DIRECT INTERELECTRODE CAPACITANCES

	WITH SHIELD[A]	WITHOUT SHIELD	
GRID TO PLATE	1.7	1.7	μμf
INPUT	1.8	1.6	μμf
OUTPUT (SECTION 1)	1.9	0.46	μμf
OUTPUT (SECTION 2)	1.9	0.34	μμf

[A] WITH EXTERNAL SHIELD #315 CONNECTED TO CATHODE OF SECTION UNDER TEST.

RATINGS

INTERPRETED ACCORDING TO DESIGN CENTER SYSTEM

EACH TRIODE UNIT

	3.15	6.3	
HEATER VOLTAGE			VOLTS
MAXIMUM HEATER-CATHODE VOLTAGE:			
HEATER NEGATIVE WITH RESPECT TO CATHODE			
TOTAL DC AND PEAK		200	VOLTS
HEATER POSITIVE WITH RESPECT TO CATHODE			
DC		100	VOLTS
TOTAL DC AND PEAK		200	VOLTS
MAXIMUM PLATE VOLTAGE		300	VOLTS
MAXIMUM NEGATIVE DC GRID VOLTAGE		50	VOLTS
MAXIMUM POSITIVE DC GRID VOLTAGE		0	VOLTS
MAXIMUM PLATE DISSIPATION		1	WATT
HEATER WARM-UP TIME (APPROX.)*		11.0	SECONDS

*HEATER WARM-UP TIME IS DEFINED AS THE TIME REQUIRED FOR THE VOLTAGE ACROSS THE HEATER TO REACH 80% OF ITS RATED VOLTAGE AFTER APPLYING 4 TIMES RATED HEATER VOLTAGE TO A CIRCUIT CONSISTING OF THE TUBE HEATER IN SERIES WITH A RESISTANCE OF VALUE 3 TIMES THE NOMINAL HEATER OPERATING RESISTANCE.

CONTINUED ON FOLLOWING PAGE

PRINTED IN U.S.A.

TUNG-SOL

CONTINUED FROM PRECEDING PAGE

TYPICAL OPERATING CONDITIONS AND CHARACTERISTICS

CLASS A_1 AMPLIFIER – EACH SECTION

HEATER VOLTAGE (PARALLEL CONNECTION)	3.15	3.15	VOLTS
HEATER CURRENT	0.6	0.6	AMP.
PLATE VOLTAGE	100	250	VOLTS
GRID VOLTAGE	-1	-2	VOLTS
AMPLIFICATION FACTOR	100	100	
PLATE RESISTANCE	80 000	62 500	OHMS
TRANSCONDUCTANCE	1 250	1 600	μMHOS
PLATE CURRENT	0.5	1.2	MA.

RESISTANCE COUPLED AMPLIFIER

R_p MEG.	R_s MEG.	R_{g1} MEG.	E_{bb} = 90 VOLTS			E_{bb} = 180 VOLTS			E_{bb} = 300 VOLTS		
			R_k	GAIN	E_o	R_k	GAIN	E_o	R_k	GAIN	E_o
0.10	0.10	0.1	1700	31	5.0	1000	40	15	760	43	30
0.10	0.24	0.1	2000	38	6.9	1100	46	20	900	50	40
0.24	0.24	0.1	3500	43	6.5	2000	54	18	1600	58	37
0.24	0.51	0.1	3900	49	8.6	2300	59	24	1800	64	47
0.51	0.51	0.1	7100	50	7.4	4300	62	19	3100	66	39
0.51	1.0	0.1	7800	53	9.1	4800	64	24	3600	69	46
0.24	0.24	10	0	37	3.9	0	53	15	0	62	32
0.24	0.51	10	0	44	5.4	0	60	19	0	67	41
0.51	.0.51	10	0	44	5.0	0	61	17	0	69	35
0.51	1.0	10	0	49	6.4	0	66	21	0	71	41

E_o IS MAXIMUM RMS VOLTAGE OUTPUT FOR FIVE PERCENT TOTAL HARMONIC DISTORTION.
GAIN MEASURED AT 2.0 VOLTS RMS OUTPUT.
FOR ZERO-BIAS DATA, GENERATOR IMPEDANCE IS NEGLIGIBLE.

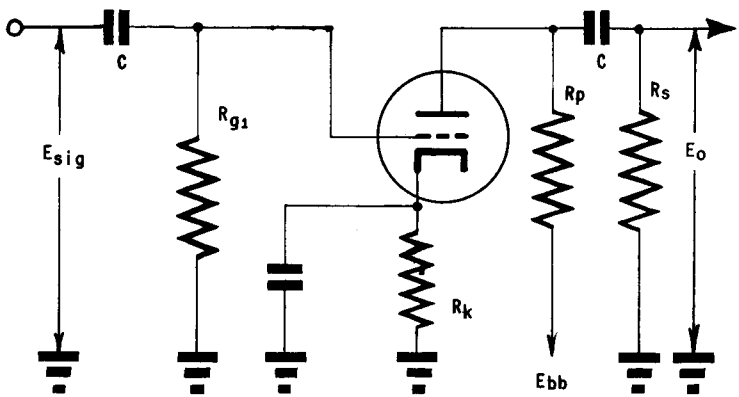

NOTE: COUPLING CAPACITORS (C) SHOULD BE SELECTED TO GIVE DESIRED FREQUENCY RESPONSE. Rk SHOULD BE ADEQUATELY BY-PASSED.

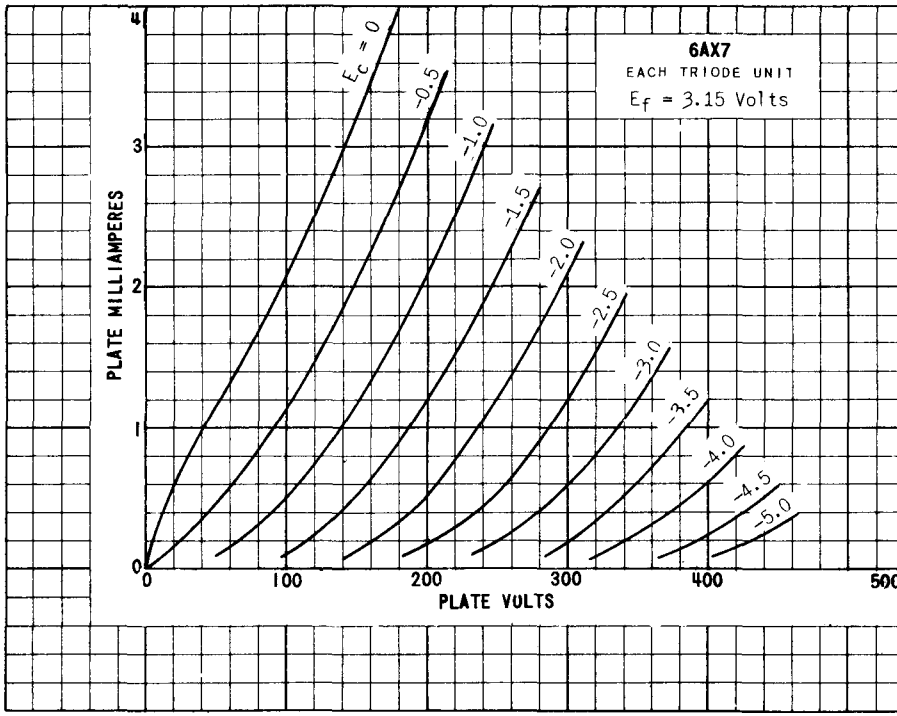

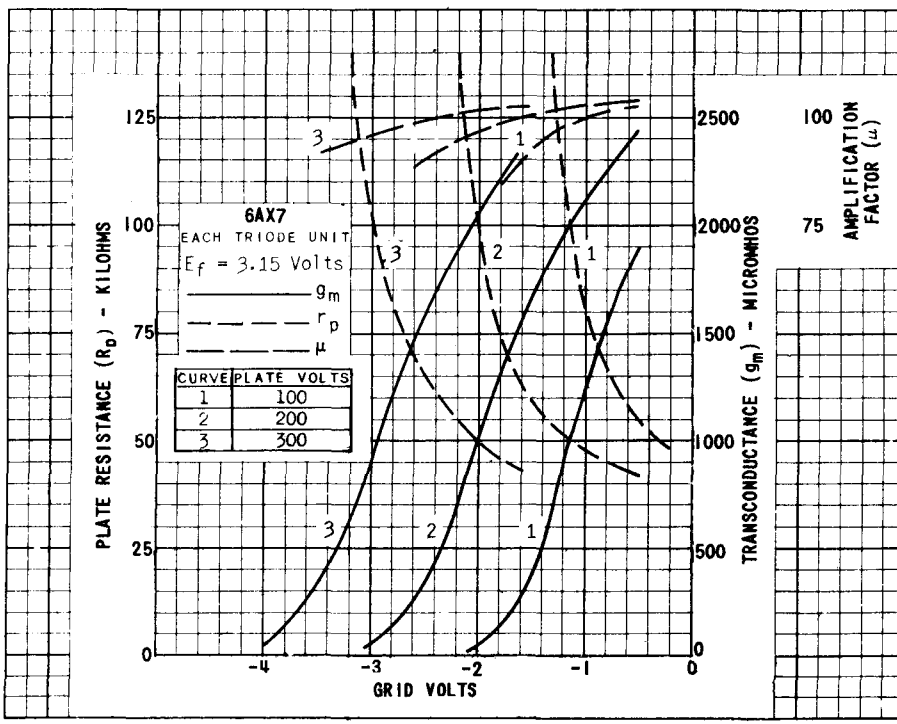

PRINTED IN U.S.A.

PLA 554