TELEVISION DAMPING DIODE TYPES
6AX4-GT, 6AX4-GTB, 12AX4-GTA, 17AX4-GT AND 25AX4-GT

The 6AX4-GT, 6AX4-GTB, 12AX4-GTA, 17AX4-GT and 25AX4-GT are 6-pin octal indirectly-heated half-wave rectifiers designed for service as the damping diode in horizontal deflection circuits of television receivers.

The 12AX4-GTA and 17AX4-GT have been designed for use in receivers which employ series connected heaters, especially in television receivers where the picture-tube heater is in series with other heaters. When each is employed in this type of circuit with other tubes similarly designed having the same heater current rating, voltage surges across individual tubes are minimized inasmuch as heater warm-up characteristic is controlled.

ELECTRICAL:

Cathode . . . . . Unipotential

Heater:

	6AX4-GT 6AX4-GTB	12AX4-GTA	17AX4-GT	25AX4-GT	
Voltage (ac or dc)	6.3	12.6	16.8	25.0	Volts
Current	1.2	0.60	0.45	0.30	Amperes
Warm-up Time⊕	--	11	11	--	Seconds

Direct Interelectrode Capacitances:

Heater to Cathode	4.0	$\mu\mu f$
Plate to Cathode and Heater	5.0	$\mu\mu f$
Cathode to Plate and Heater	8.5	$\mu\mu f$

MECHANICAL:

Bulb	T-9
Base	Short Intermediate-Shell Octal
Basing	4CG
Mounting Position	Any

MAXIMUM RATINGS:
TV DAMPER DIODE SERVICE ★

	Design Maximum Values 6AX4-GTB	Design Center Values 6AX4-GT 12AX4-GTA 17AX4-GT 25AX4-GT		
Peak Inverse Voltage	5000	4400♠	max.	Volts
Peak Plate Current	1000	750	max.	Ma.
DC Plate Current	165	125	max.	Ma.
Plate Dissipation	5.3	4.8	max.	Watts
Heater-Cathode Voltage:				
Heater Negative with Respect to Cathode:				
DC Component	900	900	max.	Volts
Total DC and Peak	5000	4400	max.	Volts
Heater Positive with Respect to Cathode:				
DC Component	100	100	max.	Volts
Total DC and Peak	300	300	max.	Volts

CHARACTERISTIC:

Voltage Drop with Plate Current of 250 Ma. . . . . 32 Volts

★ For operation in a 525 line, 30 frame system as described in "Standards of Good Engineering Practice for Television Broadcasting Stations, Federal Communications Commission". The duty of the horizontal voltage pulse not to exceed 15% of one scanning cycle. Operation as a power rectifier is not recommended.

⊕ Heater warm-up time is defined as the time required for the voltage across the heater to reach 80% of its rated value after applying four times rated heater voltage to a circuit consisting of the tube heater in series with a resistance equal to three times rated heater voltage divided by rated heater current.

♠ Absolute Maximum Value.

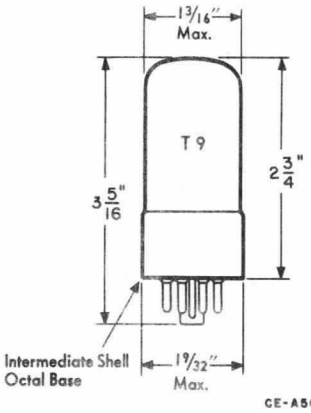

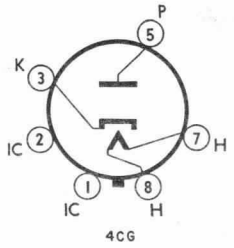

Pins 1, 2, 4, 6 must not be used as tie points.

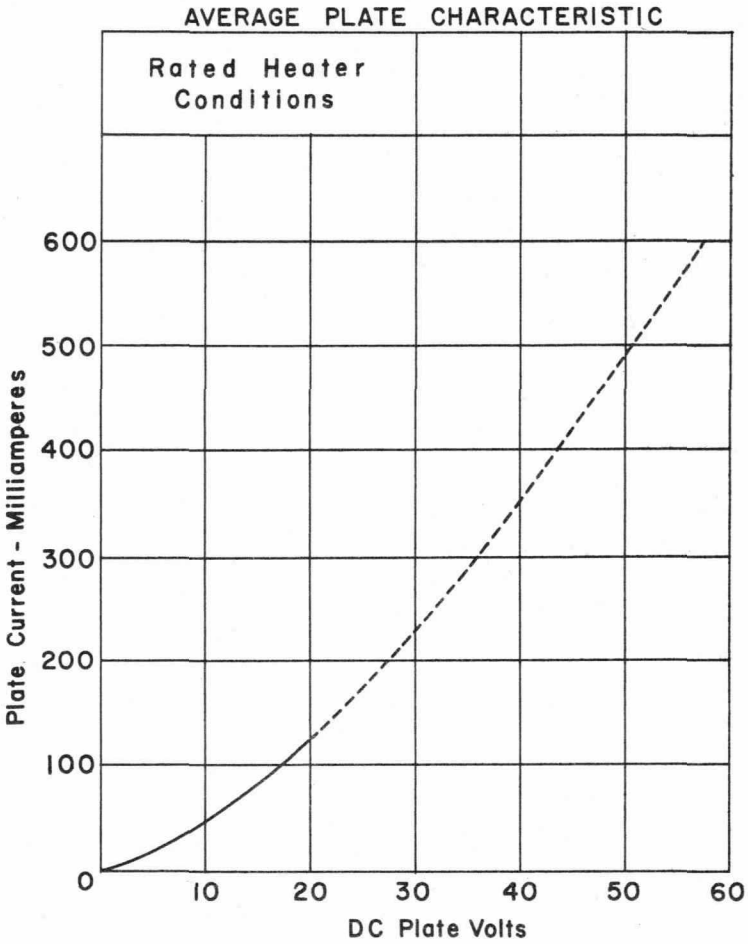
AVERAGE PLATE CHARACTERISTIC
Rated Heater Conditions
Plate Current - Milliamperes
0
100
200
300
400
500
600
10
20
30
40
50
60
DC Plate Volts

CE-A818 R1