from JEDEC release #4505, Nov. 25, 1963

AMPEREX TUBE TYPE 6960

The 6960 is a water-cooled triode designed for use in industrial RF generators and communication transmitters. The construction and characteristics of the 6960 are similar to the AMPEREX tube type 5923. However, the 6960 features an exclusive, specially processed grid which makes possible its high grid current rating and overload characteristics. This is particularly desirable in heavy-duty industrial applications.

The filament is thoriated tungsten. Maximum ratings apply up to 30 megacycles. Typical conditions for Class C industrial oscillator operation at 50 megacycles is presented herein.

GENERAL CHARACTERISTICS

MECHANICAL

Mounting Position	vertical, plate up or down
Max. Temperature of Filament Seals	210°C
Max. Temperature of Grid & Plate Seals	180°C
Cooling [1]	water & low velocity air flow (see curves)
Max. Inlet Water Temperature	50°C

ACCESSORIES

Filament Connector	Amperex No. S-3707
Filament Center Pin Connector [2]	Amperex No. S-21000
Grid Connector (for use up to 30 mc)	Amperex No. S-17288
Grid Connector (for use above 30 mc)	Amperex No. S-3706
Water Jacket	Amperex No. S-3737
Net Weight (approx.)	1 lb.

ELECTRICAL

Filament Voltage	12.6 volts
Filament Current	33 amps
Amplification Factor (I_b = 1 amp; E_b = 6000 volts)	32
Transconductance (I_b = 1 amp; E_b = 6000 volts)	15,000 micromhos
Direct Interelectrode Capacitances	
Grid to Plate	11 μμf
Grid to Filament	16 μμf
Plate to Filament	0.3 μμf

[1] At frequencies above 30 Mc it is necessary to direct a low velocity air flow to plate and grid seals.

[2] The filament center tap pin (0.413 dia.) must not be used for filament current supply. The filament center pin connector (S-21000) must, however be used for cooling of this pin.

6960

MAXIMUM RATINGS AND TYPICAL OPERATING CONDITIONS

A.F. Power Amplifier & Modulator
Class B

Maximum Ratings, Absolute Values (per tube)

	CCS
D.C. Plate Voltage	7.2 KV
D.C. Plate Current	2.2 amps
Plate Input	14 KW
Plate Dissipation	6 KW
Grid Resistor	15,000 ohms

Typical Operation (two tubes)

	CCS	CCS	CCS	CCS
D.C. Plate Voltage	7000	5000	5000	4000 volts
D.C. Grid Voltage	−210	−145	−145	−120 volts
Peak AF Grid to Grid Voltage	1220	840	690	900 volts
Zero Signal D.C. Plate Current	2x0.2	2x0.15	2x0.15	2x0.1 amps
Max. Signal D.C. Plate Current	2x2	2x1.25	2x1.1	2x1.25 amps
Effective Load Resistance, Plate to Plate	4150	4800	5500	3800 ohms
Max. Signal Drive Power (approx.)	2x310	2x130	2x65	2x140 watts
Max. Signal Power Output (approx.)	20	9	8	7.1 KW

Plate Modulated R.F. Power Amplifier
Class C - Telephony

Carrier conditions per tube with a maximum modulation factor of 1.0

Maximum Ratings, Absolute Values (per tube)

	CCS
Frequency	30 Mc
D.C. Plate Voltage	5.5 KV
D.C. Grid Voltage	1250 volts
D.C. Plate Current	1.8 amps
D.C. Grid Current	0.6 amps
Plate Input	9 KW
Plate Dissipation	4 KW

Typical Operation

	CCS	CCS	CCS
D.C. Plate Voltage	5	5	4 KV
D.C. Grid Voltage [3]	−400	−400	−300 volts
Peak RF Grid Voltage	800	730	680 volts
D.C. Plate Current	1.6	1.4	1.6 amps
D.C. Grid Current	0.6	0.5	0.6 amps
Driving Power	432	328	367 watts
Power Output	6.4	5.6	5.0 KW

[3] Grid bias partially obtained by the grid resistor.

6960 6960

R.F. Power Amplifier & Oscillator
Class C - Telegraphy

Maximum Ratings, Absolute Values (per tube)

	CCS
Frequency	30 Mc
D.C. Plate Voltage	7.2 KV
D.C. Grid Voltage	−1250 volts
D.C. Plate Current	2.2 amps
D.C. Grid Current	0.6 amp
Plate Input	14 KW
Plate Dissipation	6 KW

Typical Operation

f = 30 Mc	CCS	CCS	CCS
D.C. Plate Voltage	6.5	6.0	5.0 KV
D.C. Grid Voltage	−450	−400	−300 volts
Peak RF Grid Voltage	820	780	660 volts
D.C. Plate Current	2.0	2.0	2.0 amps
D.C. Grid Current	0.5	0.5	0.5 amp
Driving Power	370	350	297 watts
Power Output	9.5	8.5	7.1 KW
Plate Power Input	13	12	10 KW
Plate Dissipation	3.5	3.5	2.9 KW
Efficiency	73	71	71 %

Class C Oscillator
Rectified, Unfiltered, Three-Phase, Half-Wave Plate Supply

Maximum Ratings, Absolute Values (per tube)

Frequency	55 Mc
D.C. Plate Voltage	7 KV
D.C. Grid Voltage	−1250 volts
D.C. Plate Current	1.8 amps
D.C. Grid Current (Full Load)	0.5 amp
D.C. Grid Current (No Load)	0.7 amp
Plate Power Input	11 KW
Plate Dissipation	6 KW
Grid Resistor	10 Kilohms

Typical Operation

Frequency	50 Mc
Transformer Secondary Voltage (rms)	5.1 KV
D.C. Plate Voltage	6 KV
D.C. Plate Current	1.5 amps
D.C. Grid Current (Full Load)	0.4 amp
D.C. Grid Current (No Load)	0.7 amp
Grid Resistor	1000 ohms
Plate Power Input	9 KW
Plate Dissipation	2.7 KW
Plate Power Output	6 KW

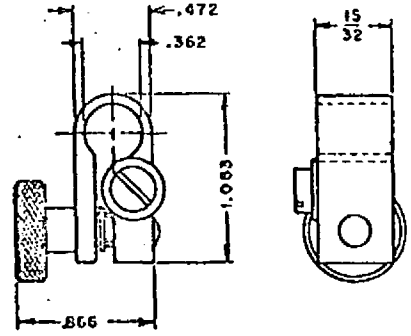

FILAMENT CONNECTOR S-3707

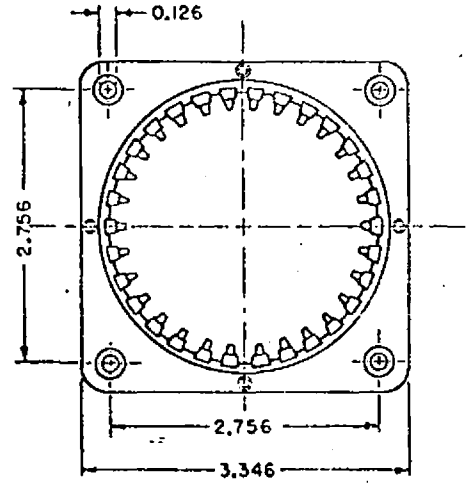

GRID CONNECTOR S-3706

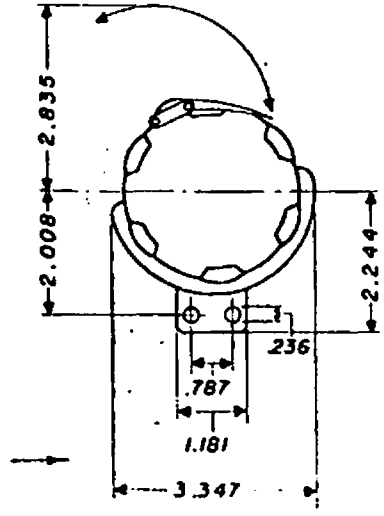

GRID CONNECTOR S-17288

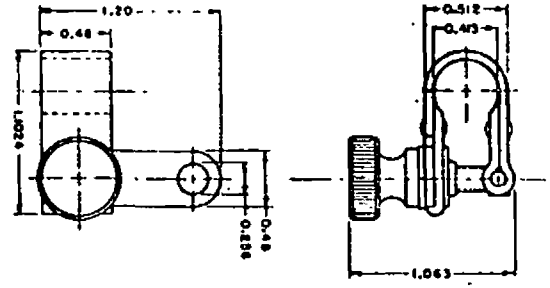

FILAMENT CENTER PIN CONNECTOR S-21000

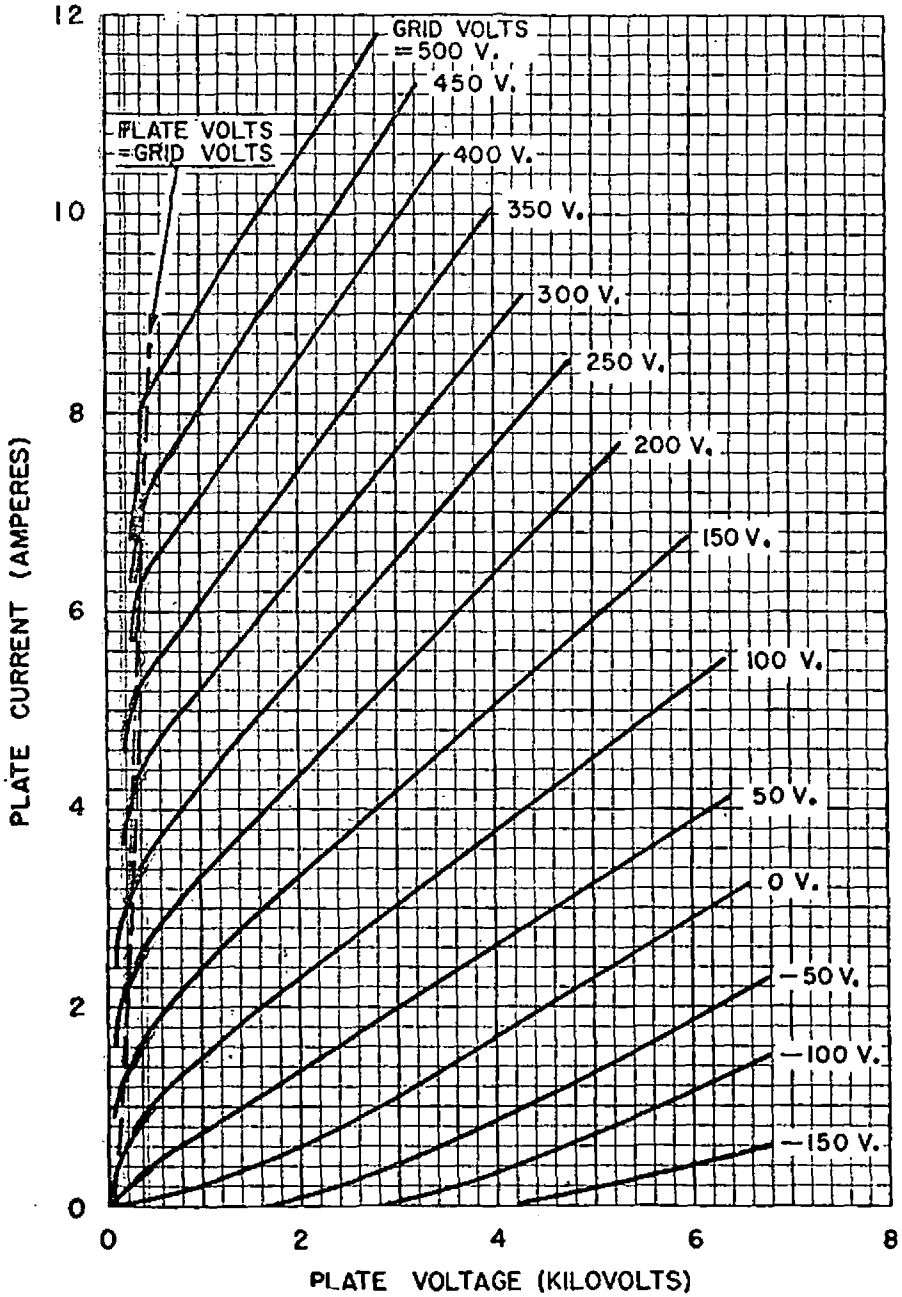

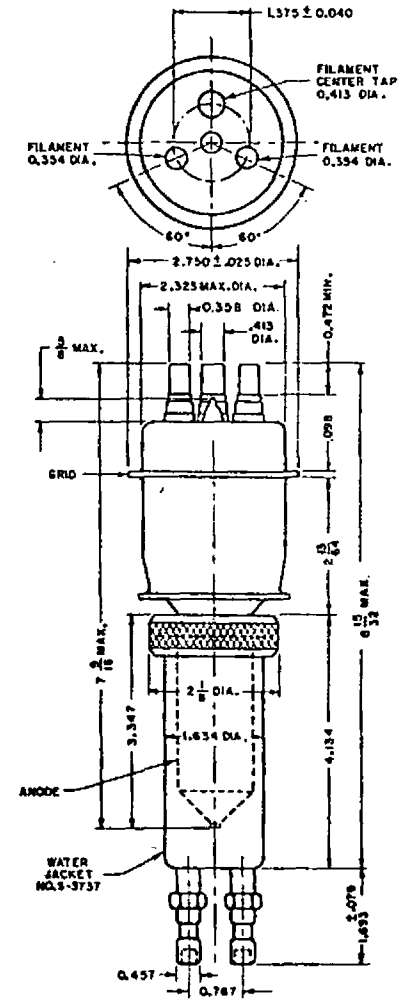

(Replaces old page no. BE-443)

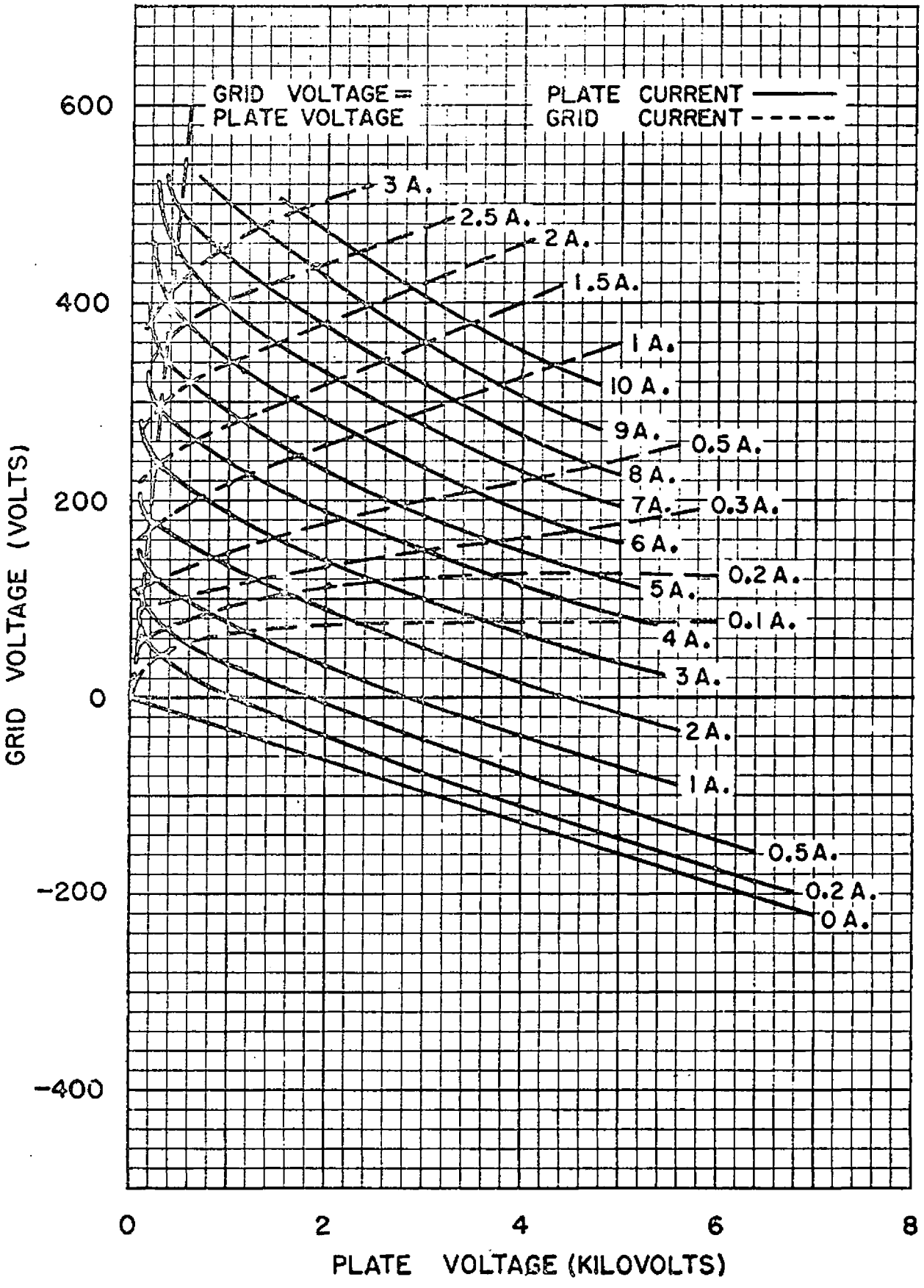

(Replaces old page no. BF-443)

6960

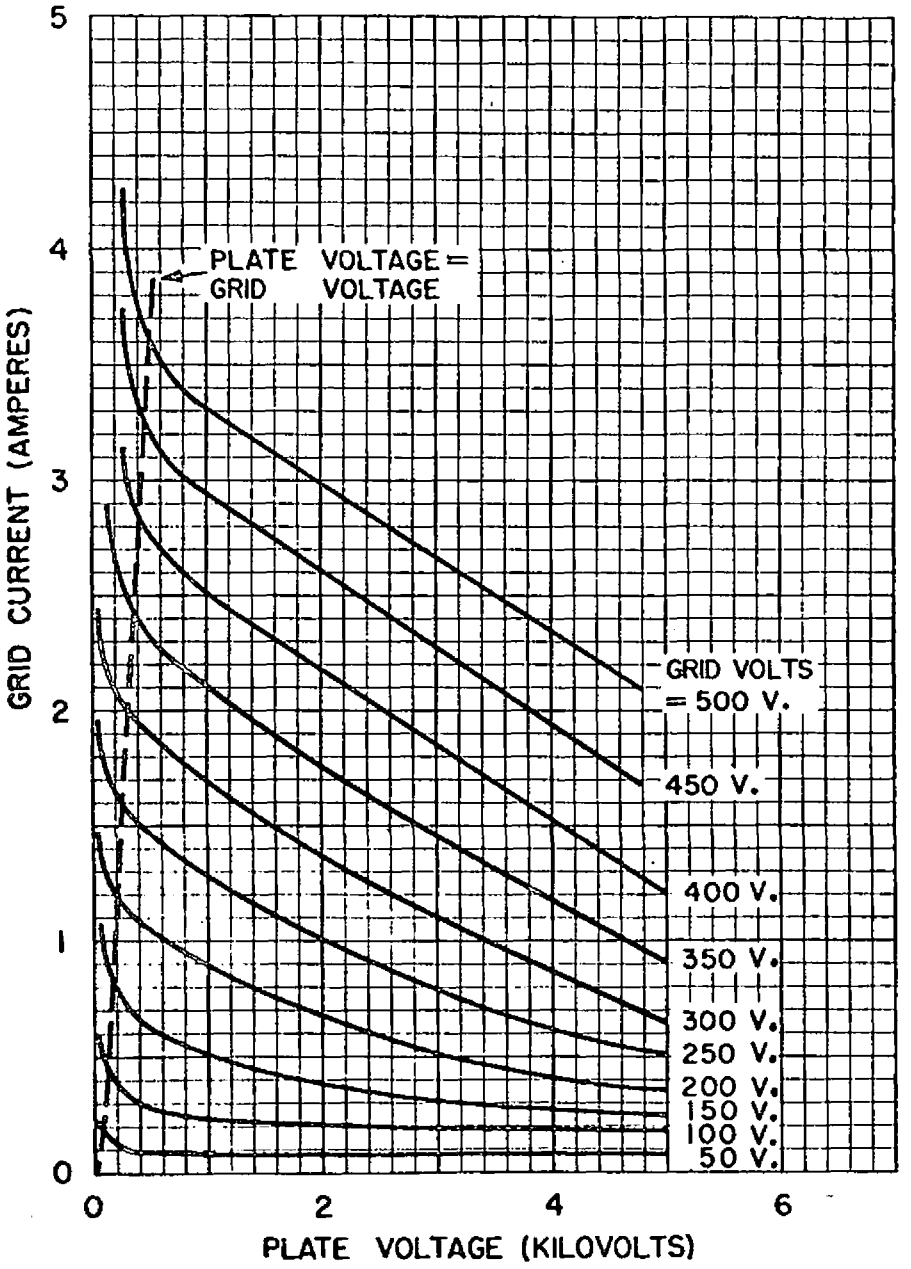

6960

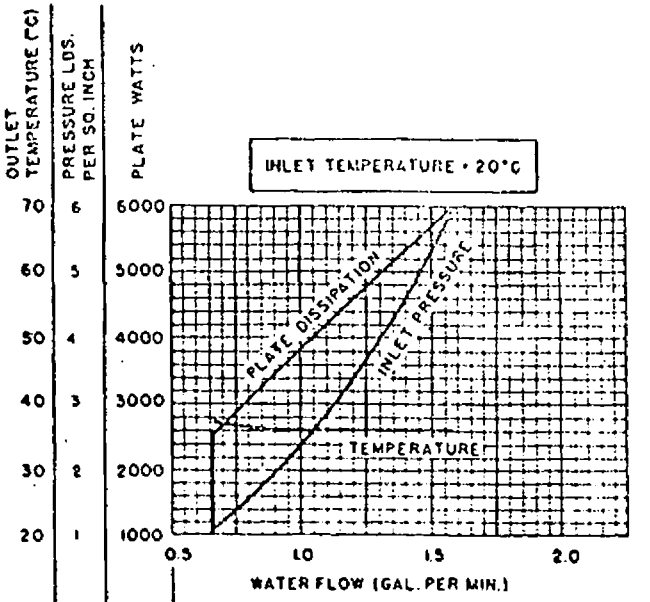

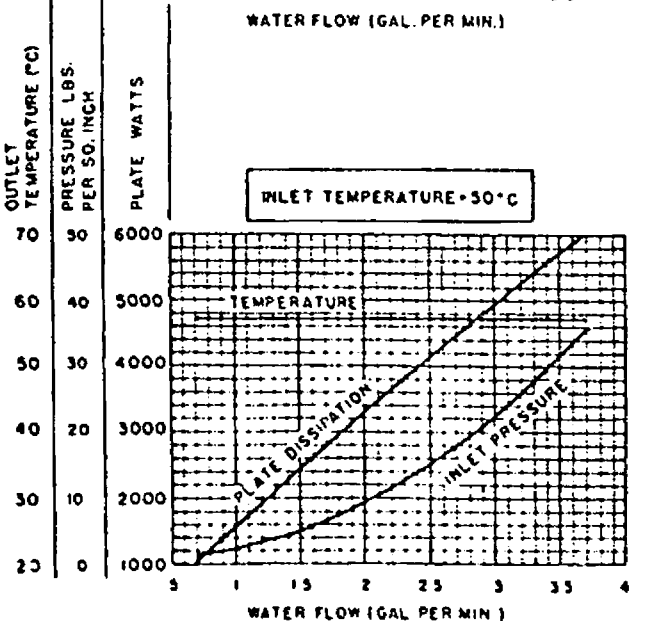

NOTE
AT INLET TEMPERATURES BETWEEN 20°C AND 50°C, THE REQUIRED WATER FLOW CAN BE FOUND BY PROPORTIONAL INTERPOLATION.