MECHANICAL DATA

Bulb	T5 ½
Base	Miniature Button 7 Pin
Mounting Position	Any
Dimensions	See Outline

ELECTRICAL DATA

	Min.	Max.
Anode Current	0.4	0.8 Ma
Supply Voltage (Anode to Cathode)	350	Vdc
Input Pulse Amplitude		
Square Wave	30	Vp-p
Sine Wave	45	Vp-p
Input Pulse Width	20	μsec
Quiescent Period	20	μsec
Input Frequency		10,000 PPS

TYPICAL OPERATION

DC Supply Voltage	400 V
Anode Resistor	430,000 Ohms
Anode Current	0.5 Ma
Cathode Resistor	68,000 Ohms
Cathode Capacitance	1000 μμf
Output Voltage, at 4000 PPS	25 Volts

PRINCIPLE OF OPERATION

A glow discharge will be established between the anode and either cathode when a steady voltage greater than the ionization voltage is applied. There will not be any preference for the glow to form on a particular cathode unless a temporary negative bias voltage is applied to the desired cathode.

Assume that a glow discharge exists between the anode (A) and cathode #1 (K_1) in Fig. 3. When a negative pulse is applied to the guide electrode (G), which is in ionization coupling with K_1 and K_2, the glow will transfer to G. The glow will remain on G as long as the negative potential is maintained; but when the guide voltage is driven positive, the glow will want to transfer to either K_1 or K_2. If the duration of the negative pulse on G is less than the cathode time constant ($R_1 C_1$) a positive voltage will remain on K_1 because of the previous glow current. The glow will then prefer to transfer from G to the more negative K_2. After transfer the glow will remain on K_2 until a second negative pulse arrives on G. At this time the voltage on K_1 will have decayed and the glow will transfer back to K_1 by the same mechanism that originally caused transfer to K_2.

OPERATION NOTES:

To change the frequency range it is best to vary the cathode capacitance and leave the cathode resistance fixed in order to maintain approximately equal output voltages. Maximum frequency is obtained with a square wave or sine wave input. Random drive is possible at any repetition rate up to the maximum rating if the negative pulse input width is constant and the minimum quiescent period is observed. For best results the cathode capacitors should be kept as large as possible. Like all counter tubes the anode resistor should be soldered directly adjacent to the socket to minimize anode to cathode capacitance.

QUICK REFERENCE DATA

The Sylvania Type 6846 binary tube is a rugged, low cost, cold cathode counter tube consisting of four electrodes enclosed in a gaseous medium used for counting, frequency division and two channel switching.

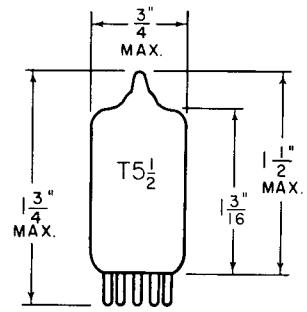

Pin 1—Cathode No. 1
2—Guide
3—Cathode No. 2
4—NC
5—NC
6—Anode
7—NC

SYLVANIA ELECTRIC PRODUCTS INC.

ELECTRONICS DIVISION
WOBURN, MASS.

Prepared and Released By The
TECHNICAL PUBLICATIONS SECTION
EMPORIUM, PENNSYLVANIA

JULY 1956

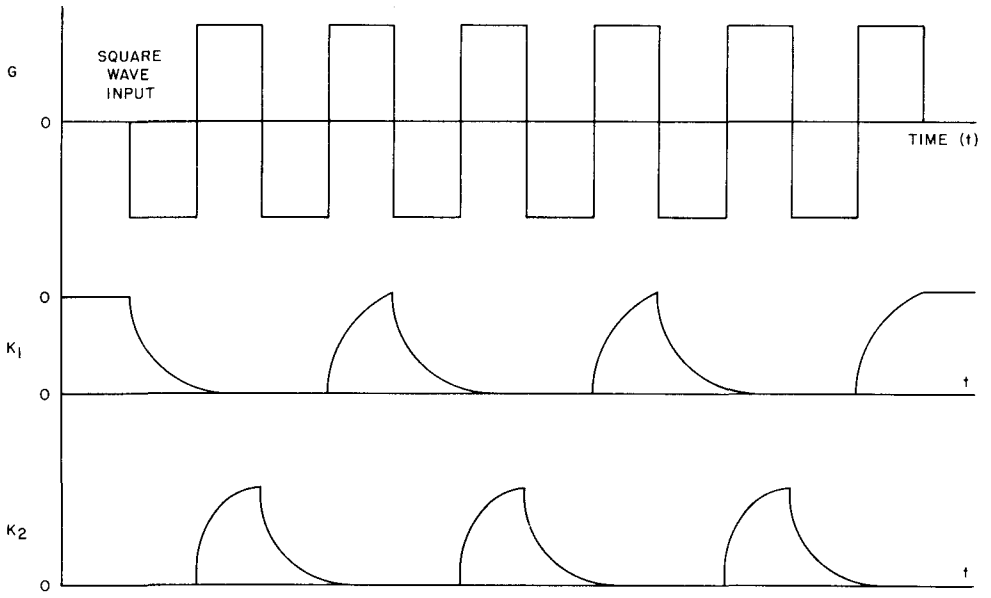

VOLTAGE — TIME CHARACTERISTICS 6846 BINARY COUNTER TUBE FIG. 2

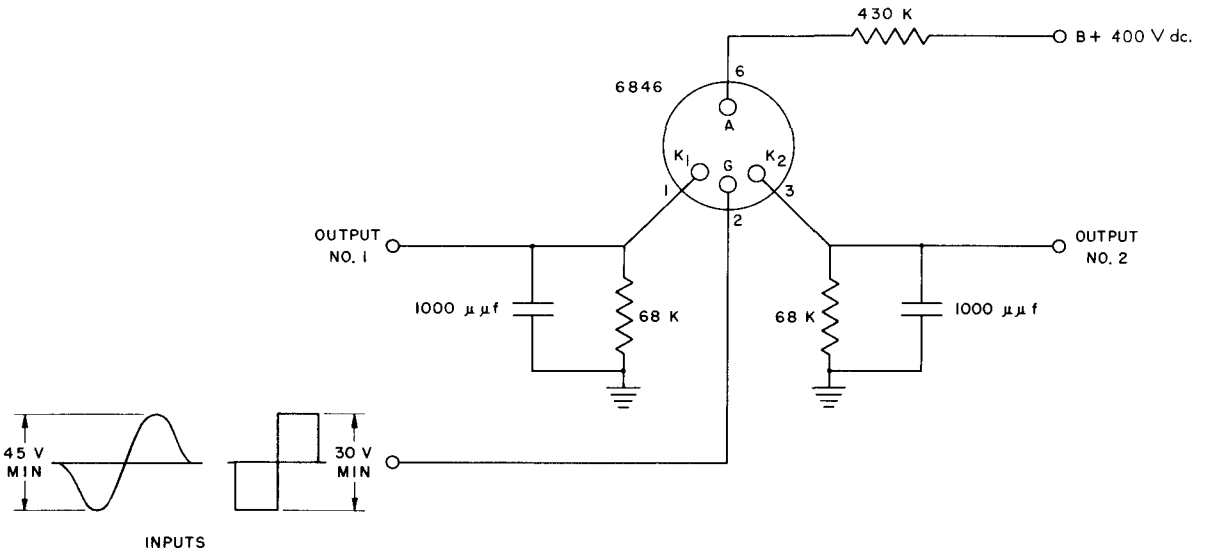

TYPICAL BINARY COUNTER TUBE DRIVING CIRCUIT FIG. 3