6810-A

MULTIPLIER PHOTOTUBE

1-11/16" Dia. Curved Circular Semitransparent Photocathode

14-Stage, Head-On Type, Flat Faceplate
S-11 Response
Very Short Time-Resolution Capability

7-1/2" Max. Length
2-3/8" Max. Diameter
Bidecal 20-Pin Base

TENTATIVE DATA

RCA-6810-A is a head-on type of multiplier phototube intended for use in scintillation counters for the detection and measurement of nuclear radiation, and applications involving the measurement of low-level light sources. Its fast response, high current gain, high peak-current capability, relative freedom from after-pulses, and its very small spread in electron-transit time make it particularly useful for fast coincidence scintillation counting.

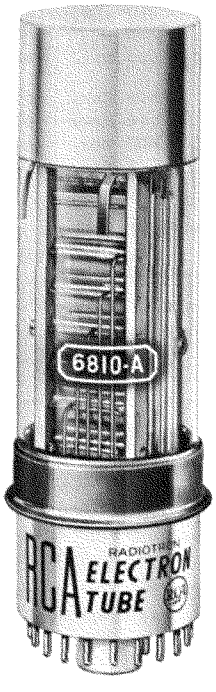

The 6810-A is capable of delivering pulse currents having magnitudes up to 0.5 ampere without space-charge effects causing appreciable deviation from linearity. Consequently, the need for an associated wide-band amplifier to amplify the output pulse is eliminated in many applications.

The spectral response of the 6810-A covers the range from about 3000 to 6500 angstroms, as shown in Fig. 1. Maximum response occurs at approximately 4400 angstroms. The 6810-A, therefore, has high sensitivity to blue-rich light and negligible sensitivity to red radiation. Because of its spectral response, the 6810-A is well suited for use with organic phosphors such as anthracene as well as with inorganic materials such as thallium-activated sodium iodide.

Design features of the 6810-A include a semi-transparent cathode on the curved inner surface of the face end of the bulb; a minimum cathode diameter of 1-11/16 inches; a faceplate with a flat external surface to facilitate the mounting of flat phosphor crystals in direct contact with the surface; fourteen electrostatically focused multiplying (dynode) stages; a focusing electrode with external connection for shaping the field which directs photoelectrons from the cathode onto the first dynode; and an accelerating electrode with external connection for minimizing the space-charge effect in the region of dynode No. 12. The material of which the dynodes are made has stable, high-current-carrying capabilities and permits tube processing to minimize regenerative effects, such as after-pulses.

The internal leads from dynode No. 14 and anode to their respective base-pin terminals are short and direct. This arrangement makes possible the use of a load circuit having a short time constant--an essential feature in pulse service.

The curved cathode surface of the 6810-A assures very good collection by dynode No. 1 of electrons from all parts of the useful cathode area. The curved surface together with the electrode configuration employed in the 6810-A provides minimum spread in electron-transit time. As a result, the 6810-A has very short time-resolution capability, i.e., in the order of 1 millimicrosecond.

The 6810-A is capable of multiplying feeble photoelectric current produced at the cathode by a median value of 12,500,000 times when operated with a supply voltage of 2000 volts. The output current of the 6810-A is a linear function of the exciting illumination under normal operating conditions.

In the scintillation type of nuclear radiation detector, the 6810-A is particularly useful because its flat faceplate permits excellent optical coupling between the phosphor and the tube. As a result, a maximum number of photoelectrons are produced for each scintillation. This feature is important in nuclear

TMK ®, Marca Registrada
Printed in U.S.A

radiation spectroscopy because it offers the advantage of minimum statistical spread in output-pulse heights. Furthermore, the focusing electrode permits optimizing the magnitude, uniformity, or speed of the response in critical applications; and the accelerating electrode permits obtaining higher peak output current in pulse service than would otherwise be possible.

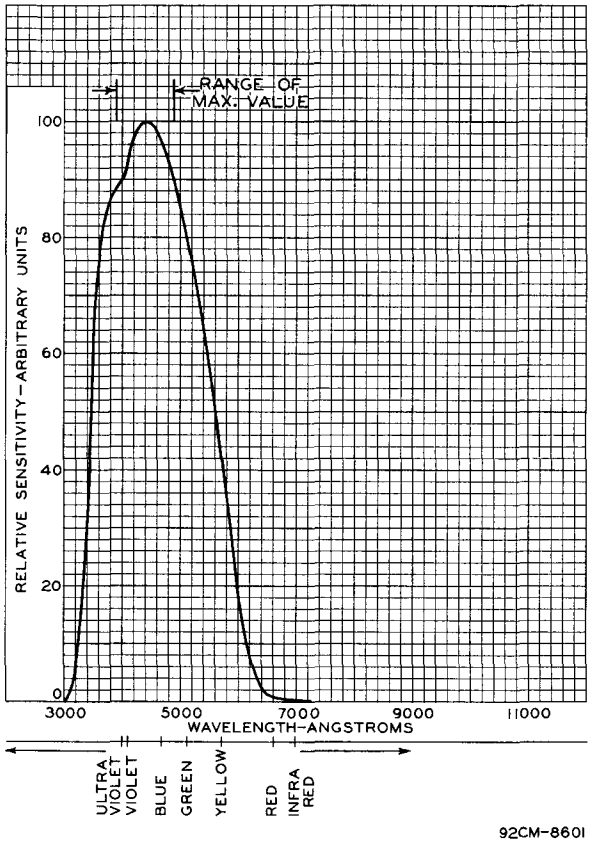

Fig. 1 - Spectral Sensitivity Characteristic of Type 6810-A which has S-11 Response. Curve is shown for Equal Values of Radiant Power at All Wavelengths.

The various outstanding features of the 6810-A commend its use in the design of a scintillation counter with high efficiency and a resolving time of approximately 1 millimicrosecond.

DATA

General:

Spectral Response		S-11
Wavelength of Maximum Response	4400 ± 500	angstroms
Cathode, Semitransparent:		
Shape		Curved Circular
Window:		
Area	2.2	sq.in.
Minimum diameter	1-11/16	in.
Index of refraction	1.51	
Direct Interelectrode Capacitances (Approx.):		
Anode to dynode No.14	2.4	μμf
Anode to all other electrodes	5.5	μμf
Dynode No.14 to all other electrodes	7.5	μμf
Maximum Overall Length		7-1/2"
Seated Length		6-11/16" ± 3/16"
Maximum Diameter		2-3/8"
Bulb		T-16
Base		Small-Shell Bidecal 20-Pin (JETEC No.B20-102)
Mounting Position		Any
Weight (Approx.)		8 oz.

VERY-LOW-LIGHT-LEVEL, LOW-NOISE HIGH-GAIN SERVICE

With Supply Voltage (E) Across Voltage Divider Providing Electrode Voltages Shown in Table I--Column A.

Maximum Ratings, *Absolute Values:*

ANODE-SUPPLY VOLTAGE (DC)	2400 max.	volts
SUPPLY VOLTAGE BETWEEN DYNODE No.14 AND ANODE (DC)	400 max.	volts
SUPPLY VOLTAGE BETWEEN CONSECUTIVE DYNODES (DC)	500 max.	volts
SUPPLY VOLTAGE BETWEEN ACCELERATING-ELECTRODE AND DYNODE No.13 (DC)	±500 max.	volts
DYNODE-No.1 SUPPLY VOLTAGE (DC)	400 max.	volts
FOCUSING-ELECTRODE SUPPLY VOLTAGE (DC)	400 max.	volts
AVERAGE ANODE CURRENT●	2 max.	ma
AMBIENT TEMPERATURE	75 max.	°C

Characteristics Range Values for Equipment Design:

With E = 2000 volts (except as noted) and Accelerating-Electrode Voltage adjusted to give maximum gain

	Min.	*Median*	*Max.*	
Sensitivity:				
Radiant, at 4400 angstroms	-	0.6	-	amp/μwatt
Cathode Radiant, at 4400 angstroms	-	0.048	-	μamp/μwatt
Luminous:#				
At 0 cps	120	750	4500	amp/lumen
With dynode No.14 as output electrode†	-	525	-	amp/lumen
Cathode Luminous:				
With tungsten light source▲	40	60	-	μamp/lumen
With blue light source (See Fig.2)**	0.04	-	-	μamp
Current Amplification	-	12.5×10^6	-	
Equivalent Anode-Dark-Current Input✠■	-	5×10^{-10}	2×10^{-9}	lumen
Equivalent Noise Input★	-	6×10^{-12}	-	lumen
Max. Transit Time Spread:				
Within a circle centered on tube face and having a diameter of—				
1-1/8"	-	1	-	milliμsec
1-9/16"	-	3	-	milliμsec

HIGH-OUTPUT-PULSE SERVICE

With Supply Voltage (E) Across Voltage Divider Providing Electrode Voltages Shown in Table I--Column B

Maximum Ratings, *Absolute Values:*

ANODE-SUPPLY VOLTAGE (DC)	2800 max.	volts
SUPPLY VOLTAGE BETWEEN DYNODE No.14 AND ANODE (DC)	400 max.	volts
SUPPLY VOLTAGE BETWEEN CONSECUTIVE DYNODES (DC)	500 max.	volts
SUPPLY VOLTAGE BETWEEN ACCELERATING-ELECTRODE AND DYNODE No.13 (DC)	±500 max.	volts
DYNODE-No.1 SUPPLY VOLTAGE (DC)	400 max.	volts
FOCUSING-ELECTRODE SUPPLY VOLTAGE (DC)	400 max.	volts
AVERAGE ANODE CURRENT●	2 max.	ma
AMBIENT TEMPERATURE	75 max.	°C

Characteristics Range Values for Equipment Design:

With E = 2400 volts (except as noted) and Accelerating-Electrode Voltage adjusted to give maximum gain

	Min.	*Median*	*Max.*	
Sensitivity:				
Radiant, at 4400 angstroms .	–	0.6	–	amp/μwatt
Cathode Radiant, at 4400 angstroms .	–	0.048	–	μamp/μwatt
Luminous:#				
At 0 cps	–	750	–	amp/lumen
With dynode No.14 as output electrode† . .	–	525	–	amp/lumen
Cathode Luminous:				
With tungsten light source▲.	40	60	–	μamp/lumen
With blue light source (See Fig.2)**	0.04	–	–	μamp
Current Amplification	–	12.5×10^6	–	
Equivalent Anode-Dark-Current Input♦⊕	–	1.1×10^{-9}	–	lumen
Equivalent Noise Input★★.	–	8×10^{-12}	–	lumen

TABLE I

VOLTAGE TO BE PROVIDED BY DIVIDER		
Between	**COLUMN A** 5.4% of Supply Voltage (E) multiplied by	**COLUMN B** 2.75% of Supply Voltage (E) multiplied by
Cathode and Focusing Electrode	1	1
Focusing Electrode and Dynode No.1	1	1
Dynode No.1 and Dynode No.2	1	1
Dynode No.2 and Dynode No.3	1	1
Dynode No.3 and Dynode No.4	1	1
Dynode No.4 and Dynode No.5	1	1
Dynode No.5 and Dynode No.6	1	1
Dynode No.6 and Dynode No.7	1	1.2
Dynode No.7 and Dynode No.8	1	1.5
Dynode No.8 and Dynode No.9	1	1.9
Dynode No.9 and Dynode No.10	1	2.4
Dynode No.10 and Dynode No.11	1	3.0
Dynode No.11 and Dynode No.12	1.25	3.8
Dynode No.12 and Dynode No.13	1.5	4.8
Dynode No.13 and Dynode No.14	1.75	6
Dynode No.14 and Anode	2	4.8
Anode and Cathode	18.5	36.4

● Averaged over any interval of 30 seconds maximum.

Under the following conditions: The light source is a tungsten-filament lamp operated at a color temperature of 2870°K. A light input of 0.1 microlumen is used. The load resistor has a value of 0.01 megohm.

† An output current of opposite polarity to that obtained at the anode may be provided by using dynode No.14 as the output electrode. With this arrangement, the load is connected in the dynode-No.14 circuit and the anode serves only as collector.

▲ Under the following conditions: The light source is a tungsten-filament lamp operated at a color temperature of 2870°K. The value of light flux is 0.01 lumen and 200 volts are applied between cathode and all other electrodes connected together as anode. The load resistor has a value of 0.01 megohm.

** Under the following conditions: Light incident on the cathode is transmitted through a blue filter (Corning, Glass Code No.5113 polished to 1/2 stock thickness) from a tungsten-filament lamp operated at a color temperature of 2870°K. The value of light flux on the filter is 0.01 lumen. The load resistor has a value of 0.01 megohm, and 200 volts are applied between cathode and all other electrodes connected together as anode.

⊕ Measured at a tube temperature of 25°C and with the supply voltage (E) adjusted to give a luminous sensitivity of 2000 amperes per lumen. Dark current caused by thermionic emission and ion feedback may be reduced by the use of a refrigerant.

■ For maximum signal-to-noise ratio, operation with a supply voltage (E) below 2000 volts is recommended.

★ Under the following conditions: Supply voltage (E) is 2000 volts, 25°C tube temperature, external shield potential of -2000 volts, ac-amplifier bandwidth of 1 cycle per second, tungsten light source of 2870°K interrupted at a low audio frequency to produce incident radiation pulses alternating between zero and the value stated. The "on" period of the pulse is equal to the "off" period. The output current is measured through a filter which passes only the fundamental frequency of the pulses.

♦ Measured at a tube temperature of 25°C and with the supply voltage (E) adjusted to give a luminous sensitivity of 2000 amperes per lumen. Dark current caused by thermionic emission may be reduced by the use of a refrigerant.

⊕ For maximum signal-to-noise ratio, operation with a supply voltage (E) below 2300 volts is recommended.

★★ Same as (★) except the supply voltage (E) is 2400 volts, and the external shield potential is -2400 volts.

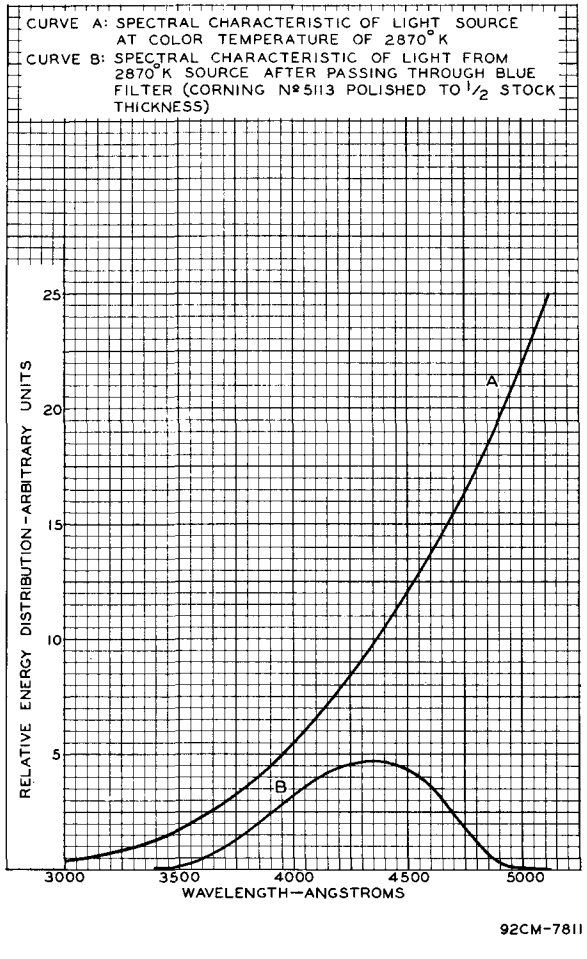

Fig.2 - Spectral Characteristic of 2870°K Light Source, and Spectral Characteristic of Light from 2870°K after Passing through Indicated Filter.

DEFINITIONS

Radiant Sensitivity. The quotient of output current by incident radiant power of a given wavelength, at constant electrode voltages.

Cathode Radiant Sensitivity. The quotient of current leaving the photocathode by incident radiant power of a given wavelength.

Luminous Sensitivity. The quotient of output current by incident luminous flux, at constant electrode voltages.

Current Amplification. Ratio of the output current to the photocathode current, at constant electrode voltages.

Equivalent Anode-Dark-Current Input. The quotient of the anode dark current by the luminous sensitivity.

Equivalent Noise Input. That value of incident luminous flux which when modulated in a stated manner produces an rms output current equal to the rms noise current within a specified bandwidth.

Transit-Time Spread. The increase in width of the anode pulse over that of the input pulse. Anode pulse width is measured at 50% of the pulse height.

GENERAL CONSIDERATIONS

The 6810-A is a phototube incorporating an electron multiplier. An electron multiplier utilizes the phenomenon of secondary emission to amplify signals composed of electron streams. In the 6810-A multiplier phototube, represented in Fig.3, the electrons emitted from the illuminated curved cathode are directed by fixed electrostatic fields to the first dynode (secondary emitter). The electrons impinging on the dynode surface produce many other electrons, the number depending on the energy of the impinging electrons. These secondary electrons are then directed by fixed electrostatic fields along curved paths to the second dynode where they produce more new electrons. This multiplying process is repeated in each successive stage, with an ever-increasing stream of electrons, until those emitted from the last dynode (dynode No.14) are collected by the anode and constitute the current utilized in the output circuit.

The anode consists of a grating which allows the electrons from dynode No.13 to pass through it to dynode No.14. Spacing between dynode No.14 and anode creates a collecting field such that all the electrons emitted by dynode No.14 are collected by the anode. Hence, the output current is substantially independent of the instantaneous positive anode potential over a wide range. As a result of this characteristic, the 6810-A can be coupled to any practical load impedance.

The shield which is adjacent to dynode No.1 shields dynode No.1 and the cathode and prevents ion feedback. If positive ions produced in the high-current region near the anode were allowed to reach the cathode or the initial dynode stages, they would cause the emission of spurious electrons which after multiplication would produce undesirable and often uncontrollable regeneration. The metallic coating on the inner side wall of the glass bulb is connected to the cathode, and serves to direct the electrons from the cathode toward dynode No.1.

The focusing electrode shapes the field which directs photoelectrons from the cathode onto dynode No.1. For consideration of the operating voltage applied to the focusing electrode, see INSTALLATION and APPLICATION.

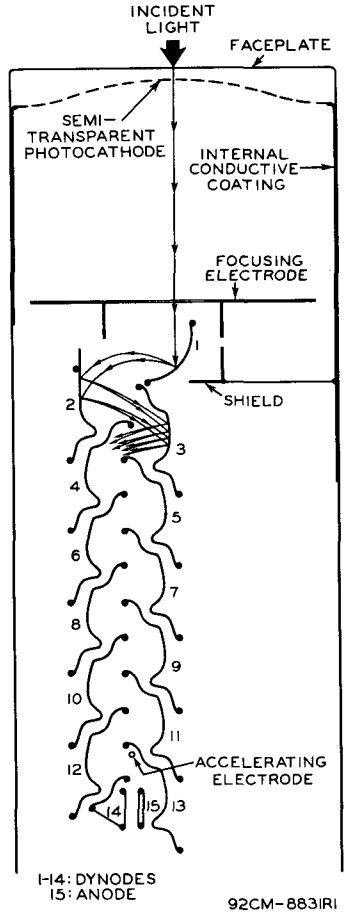

Fig.3 - Schematic Arrangement of Type 6810-A Structure.

The accelerating electrode serves to minimize the effect of space charge in the region of dynode No.12. For consideration of the operating potential of dynode No.12 with respect to dynode No.13, see INSTALLATION and APPLICATION.

INSTALLATION and APPLICATION

The *maximum ratings* in the tabulated data are limiting values above which the serviceability of the 6810-A may be impaired from the viewpoint of life and satisfactory performance. Therefore, in order not to exceed these absolute ratings, the equipment designer has the responsibility of determining an average design value below each absolute rating by an amount such that the absolute values will never be exceeded under any usual condition of supply-voltage variation,

load variation, or manufacturing variation in the equipment itself.

The *maximum ambient temperature* as shown in the tabulated data is a tube rating which is to be observed in the same manner as other ratings. This rating should not be exceeded because too high a bulb temperature may cause the volatile cathode surface to evaporate with consequent decrease in the life and sensitivity of the tube.

The *base pins* of the 6810 fit the bidecal 20-contact socket, such as "Alden No.220FT with 20 contacts", or equivalent. The socket should be made of high-grade, low-leakage material, and should be installed so that the incident light falls on the face end of the tube.

In general, *supply voltages* for the electrodes of the 6810-A should be provided as shown in Table I. For *applications involving very low light and requiring low noise and high gain*, supply voltages should be provided as shown in Table I--Column A. For *applications requiring high output pulses*, higher operating voltages may be used as shown in Table I--Column B.

The operating voltage between dynode No.14 and anode should be kept as low as will permit operation with anode-current saturation. Referring to the anode characteristics curves, shown in Fig.4, it will be seen that saturation occurs in the approximate range of 50 to 100 volts. With low operating voltage between dynode No.14 and anode, the dark current is reduced. As a result, the operating stability of the 6810-A is improved without sacrifice in sensitivity. To obtain the indicated operating voltage between dynode No.14 and anode, it will be necessary to increase the supply voltage between these electrodes above the operating voltage by an amount to allow for the signal-output voltage desired.

The *focusing-electrode potential* may be adjusted between that of the photocathode and that of dynode No.1 to optimize the magnitude, uniformity, or speed of the response. When the focusing electrode is operated at dynode-No.1 potential, the smallest possible spread in transit time of the photoelectrons as well as good uniformity of response over the entire cathode area is obtained. As the potential of the focusing electrode is decreased toward that of the cathode, all other electrode potentials remaining constant, it will be noticed that the anode current generally passes through a maximum which occurs when the value of focusing-electrode potential is 40 to 80 per cent of that between cathode and dynode No.1. Operation with the focusing electrode at a potential near that of the cathode is characterized by optimum signal magnitude with some increase in transit-time spread and some decrease in uniformity of response over the cathode area. Such operation may offer an advantage in some applications where the increased number of collected photoelectrons is the primary consideration. The voltage for the focusing electrode can be obtained by connecting it to the arm of a potentiometer between cathode and dynode No.1 in the voltage divider.

The *accelerating electrode*, when operated at a suitable potential with respect to dynode No.13, serves to minimize the effect of space charge in the region of dynode No.12. Provision should be made to adjust the accelerating-electrode voltage over a range extending from the value at which dynode No.13 operates to that at which the anode operates. The adjustment may be accomplished by means of a high-resistance potentiometer connected between the voltage-divider tap for dynode No.13 and the anode end of the voltage divider. Since the accelerating electrode draws

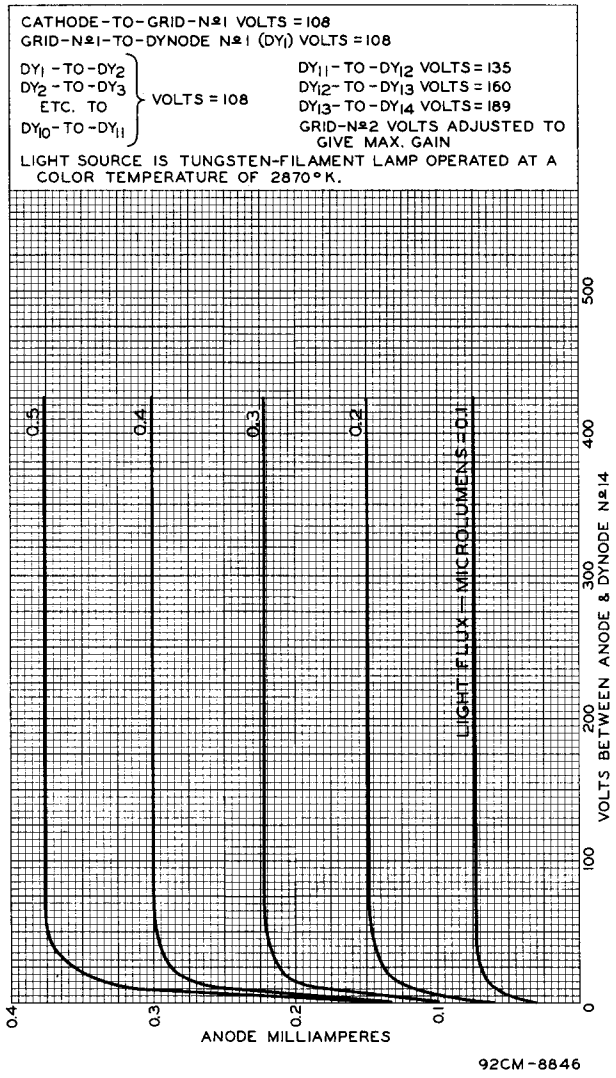

Fig.4 - Average Anode Characteristics of Type 6810-A Used in Low-Light, Low-Noise, High-Gain Service.

at most only negligible current, the potentiometer can have sufficiently high resistance so that it will not substantially affect the voltage distribution at the taps of the shunted section of

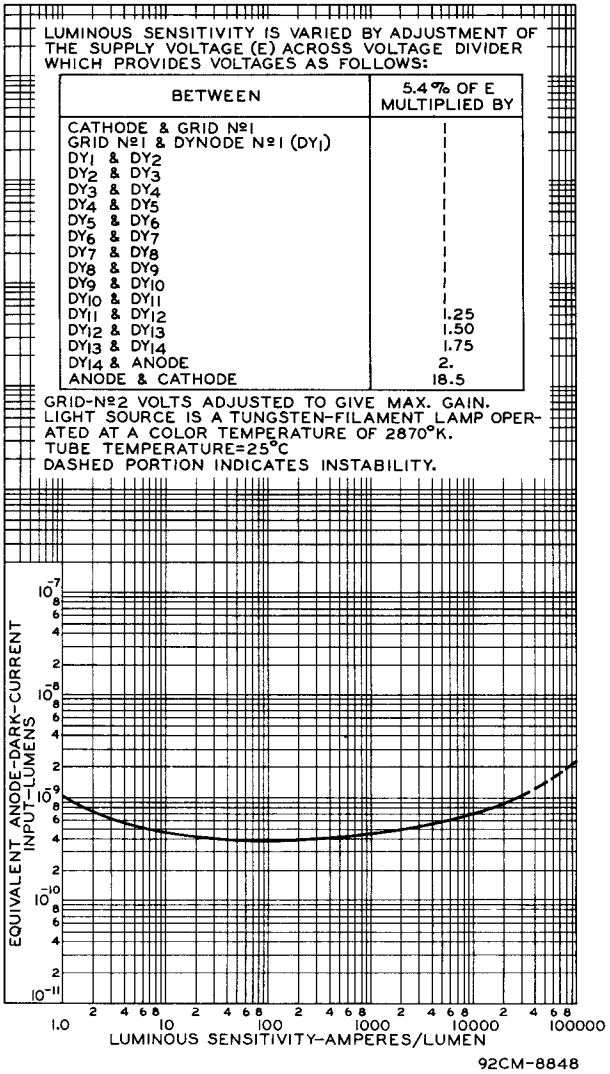

Fig.5 - Typical Anode-Dark-Current Characteristic of Type 6810-A Used in Low-Light, Low-Noise, High-Gain Service.

the divider. Within the specified adjustment range, it will be found that the accelerating-electrode voltage may be adjusted to obtain either maximum gain or maximum peak output current. In general, the adjustment to apply the highest voltage to the accelerating electrode will permit the highest peak current with some sacrifice in gain.

In applications where it is desired to keep the statistical fluctuations to a minimum, e.g., as in nuclear radiation spectroscopy, the potential between cathode and dynode No.1 may be increased to the rated maximum value of 400 volts.

A very small *dark current* is observed when voltage is applied to the electrodes of the 6810-A in complete darkness. This current has a component caused by leakage, and a component consisting of pulses produced by electrons thermionically released from the cathode, by secondary electrons released by ionic bombardment of the dynodes or cathode, or by cold emission from the electrodes. The magnitude of the dark current establishes a limit below which the exciting radiation on the cathode can not be detected.

When the application utilizes *continuous luminous excitation and dc anode current*, and it

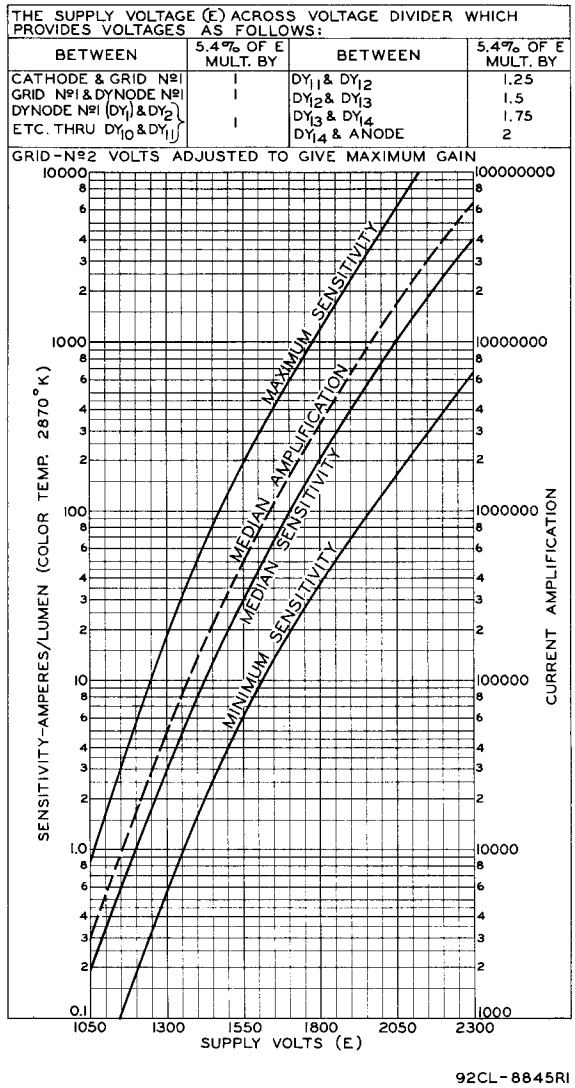

Fig.6 - Characteristics of Type 6810-A Used in Low-Light, Low-Noise, High-Gain Service.

is desired to have a high ratio of signal output to dark current, it is recommended that the operating supply voltage (E) be determined with reference to the curve in Fig.5 or Fig.7 which shows the

equivalent anode-dark-current input as a function of luminous sensitivity for the 6810-A and the curve in Fig.6 or Fig.8 which shows luminous sensitivity as a function of the supply voltage. The voltage between dynode No.14 and the anode should be kept as low as will permit operation at a point just giving anode-current saturation.

In applications involving low-light level *pulsed excitation and ac coupling at the anode*, the best signal-to-noise ratio is obtained with a supply voltage (E) in the range from 1500 to 2000 volts. Within this range, the noise at the anode is produced primarily by the statistical release of thermal electrons, and the noise

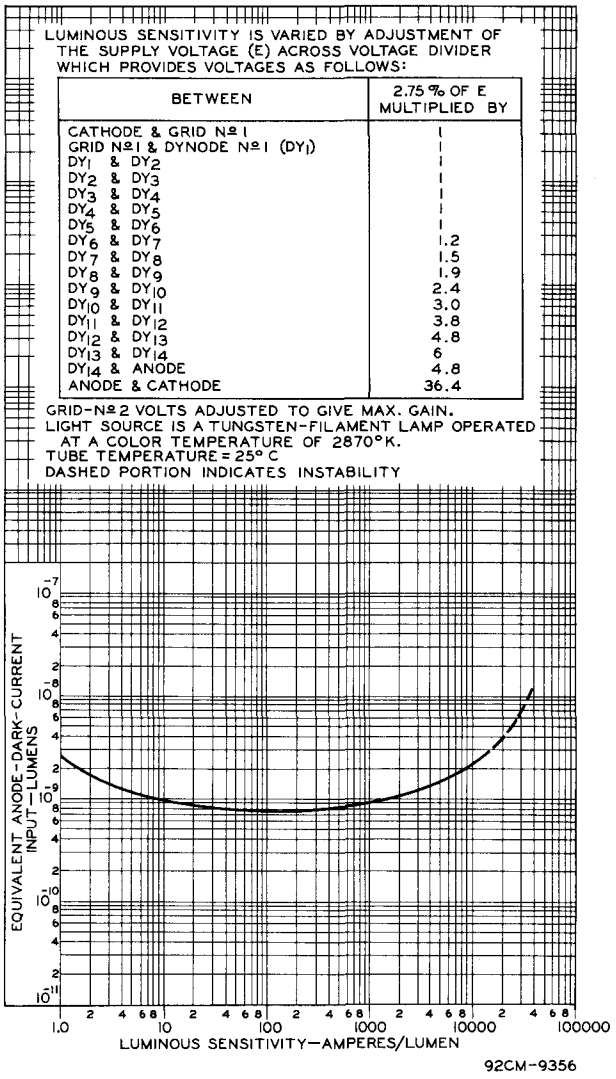

Fig.7 - Typical Anode-Dark-Current Characteristic of Type 6810-A Used in High-Output-Pulse Service.

power spectrum is essentially flat up to about 50 megacycles per second. At voltages above 2000 volts, regenerative phenomena usually contribute to the noise.

The noise spectrum of the 6810-A is such that the threshold of pulse detection depends on the associated circuitry. The bandpass filter should be designed to pass only the frequency range of

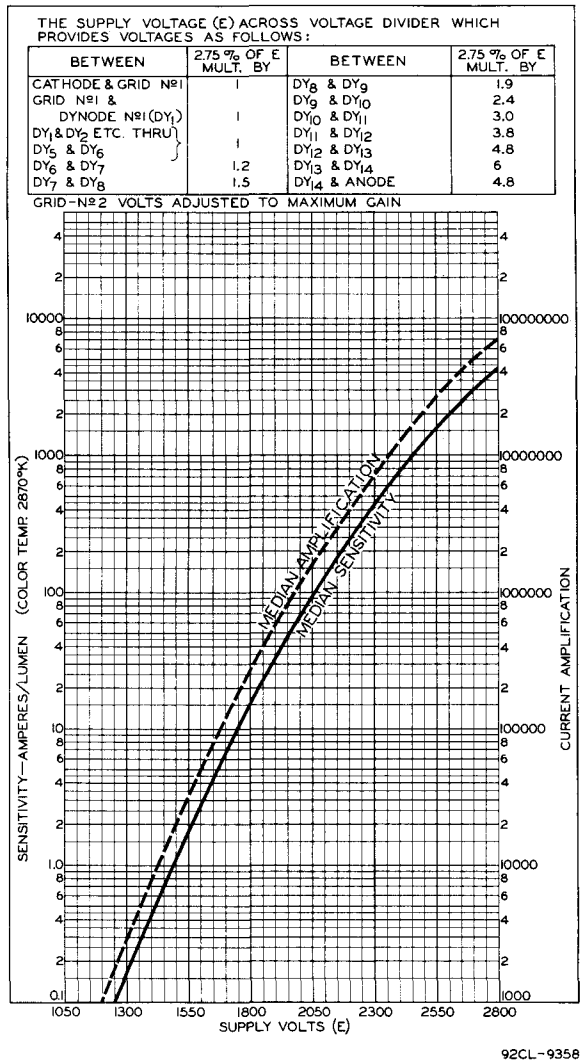

Fig.8 - Characteristics of Type 6810-A Used in High-Output-Pulse Service.

the exciting signal in order to eliminate as much noise as possible.

In either dc or ac applications where maximum gain with unusually low dark current is required, the *use of a refrigerant*, such as dry ice or liquid air, to cool the bulb of the 6810-A is recommended. The resulting reduction in thermionic emission from the cathode lowers the detection threshold to give improved operation. The curves in Figs.9 and 10 show the equivalent noise input as a function of the temperature of the 6810-A.

Exposing the 6810-A to strong ultraviolet radiation may cause an increase in anode dark current. After cessation of such irradiation, the dark current drops rapidly.

The *operating stability* of the 6810-A is dependent on the magnitude of the anode current and its duration. When the 6810-A is operated at high average values of anode current, a drop in sensitivity (sometimes called fatigue) may be expected. The extent of the drop below the tabulated sensitivity values depends on the severity of the operating conditions. After a period of idleness, the 6810-A usually recovers a substantial percentage of such loss in sensitivity.

The use of an average anode current well below the maximum rated value of 2 milliamperes is recommended when stability of operation is important. When maximum stability is required, the anode current should not exceed 250 microamperes.

The *range of sensitivity values* is dependent on the respective amplification of each dynode

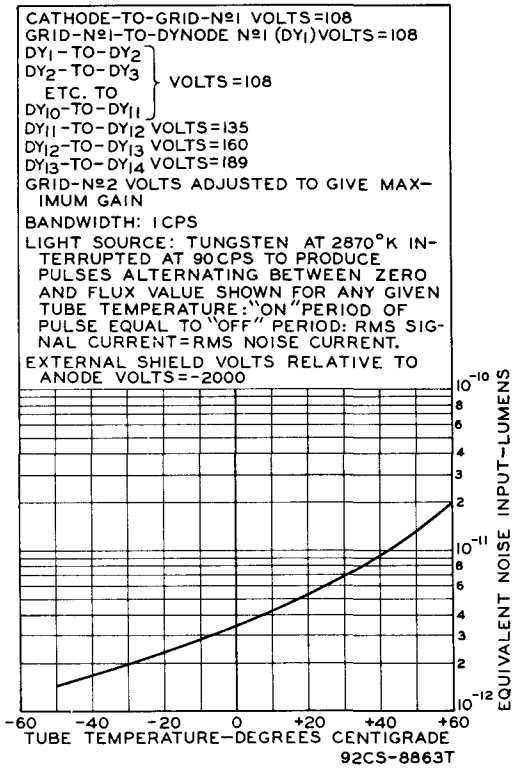

Fig. 9 - Equivalent-Noise-Input Characteristic of Type 6810-A Used in Low-Light, Low-Noise, High-Gain Service.

stage. Hence large variations in sensitivity can be expected between individual tubes of a given type. The overall amplification of a multiplier phototube is equal to the average amplification per stage raised to the *nth* power, where *n* is the number of stages. Thus, very small variations in amplification per stage produce very large changes in overall tube amplification.

Because these overall changes are very large, it is advisable for the equipment designer to

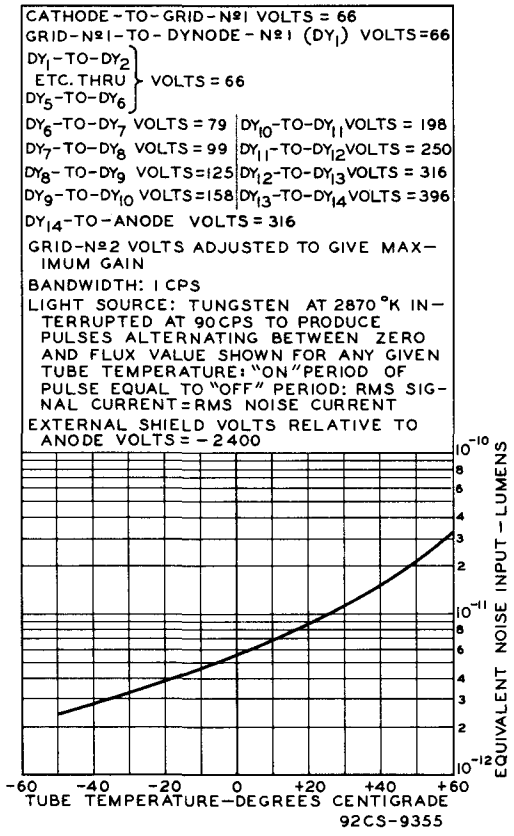

Fig. 10 - Equivalent-Noise-Input Characteristic of Type 6810-A Used in High-Output-Pulse Service.

provide adequate adjustment of the supply voltage so that the amplification of individual tubes can be adjusted to the desired design value. The voltage-adjustment range required to take care of variations between individual tubes may be determined from Fig. 6 for low-light-level service. For example, if a sensitivity design value of 400 amperes per lumen is desired, it will be observed that this value on the "minimum" sensitivity curve corresponds to a supply voltage of about 2200 volts, and on the "maximum" sensitivity curve to a supply voltage of 1650 volts. Therefore, provision should be made to adjust the supply voltage over the range from 1650 to 2200 volts.

Electrostatic and/or magnetic shielding of the 6810-A may be necessary. The metallic coating on the inner side wall of the glass bulb acts as an electrostatic shield to prevent the coated portion of the bulb wall from charging to a positive potential. However, the uncoated area of the bulb wall tends to charge to a potential near

that of the anode, especially when the 6810-A is operated at voltages near the maximum, with the result that an internal discharge phenomenon may occur and cause an increase in noise. To prevent this possibility, it is suggested that a shield

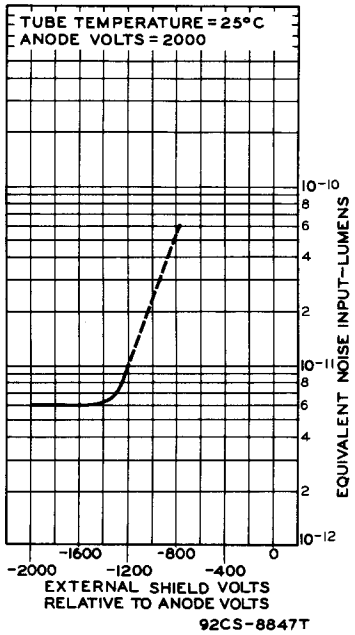

Fig. 11 - Effect of External-Shield Potential on Equivalent Noise Input of Type 6810-A Used in Low-Light, Low-Noise, High-Gain Service

be closely fitted over the uncoated area and be connected, as a safety precaution (see below), through a high impedance in the order of 10 megohms to a potential near that of the cathode. The shield may consist of a conductive coating painted on the clear portion of the bulb above the base, or metallic foil wrapped around the clear area. The curve in Fig. 11 illustrates the effect of shield potential on the equivalent noise input.

It is recommended that the *metal collar* (see Dimensional Outline) be operated at cathode potential.

With certain orientations of the 6810-A, it will be observed that the earth's magnetic field is sufficient to cause a noticeable decrease in the response of the tube. The curve in Fig. 12 shows the effect on anode current of variation in magnetic-field strength under the conditions indicated. With increase in voltage between cathode and dynode No. 1, the effect of the magnetic field will cause less decrease in anode current. When the focusing electrode is operated at a potential near that of the cathode, the effect of the magnetic field will be increased. For orientations of the 6810-A other than that indicated in Fig. 12, the effect of the magnetic field is less pronounced. When the magnetic field is parallel to the axis of the tube, the effect is least.

To prevent such decrease in response of the tube, magnetic shielding should be provided. In general it is recommended that the shield be connected to cathode potential. When so connected, the shielding may closely fit the bulb and serves the dual purpose of providing both magnetic and electrostatic shielding. When connected to anode potential, this shielding should be spaced

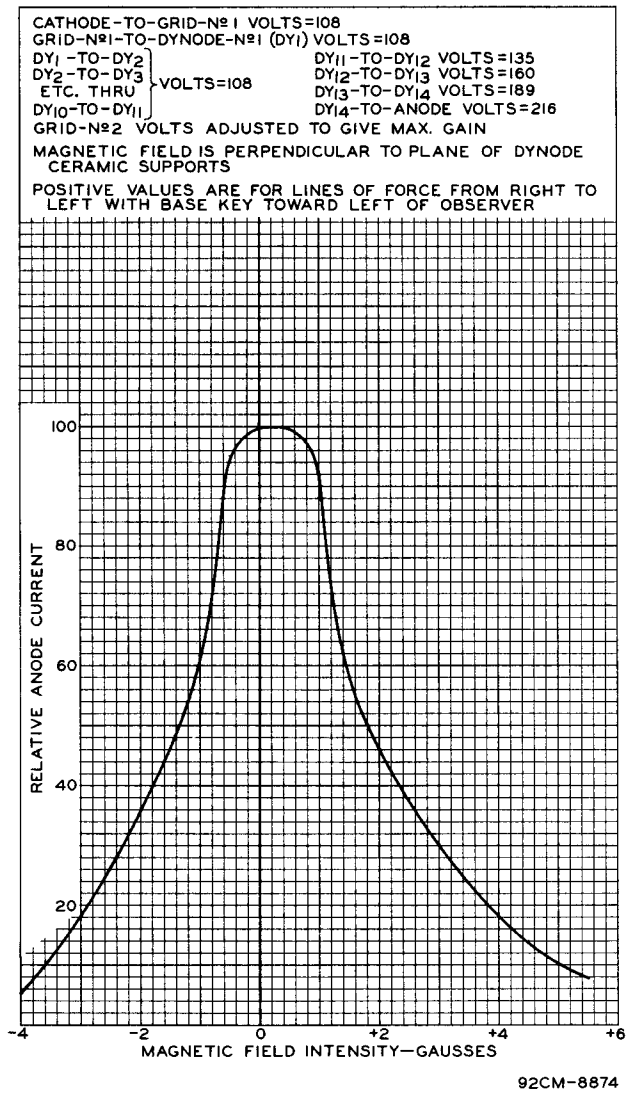

Fig. 12 - Effect of Magnetic Field on Anode Current of Type 6810-A Used in Low-Light, Low-Noise, High-Gain Service.

at least 1/2 inch from the bulb wall to prevent the internal discharge phenomenon described above.

It is to be noted that the use of an external magnetic and/or electrostatic shield at high

negative potential presents a safety hazard unless the shield is connected through a high impedance in the order of 10 megohms to the potential. If the shield is not so connected, *extreme care should be observed in providing adequate safeguards to prevent personnel from coming in contact with the high potential of the shield.*

Adequate *light shielding* should be provided to prevent extraneous light from reaching any part of the 6810-A. Although the metallic coating on the inner side wall of the glass bulb serves to reduce the amount of extraneous light reaching the electrodes, it is inadequate to shield completely the entire structure from extraneous light.

Whenever frequency response is important, the leads from the 6810-A to the amplifier should be short so as to minimize capacitance shunting of the phototube load.

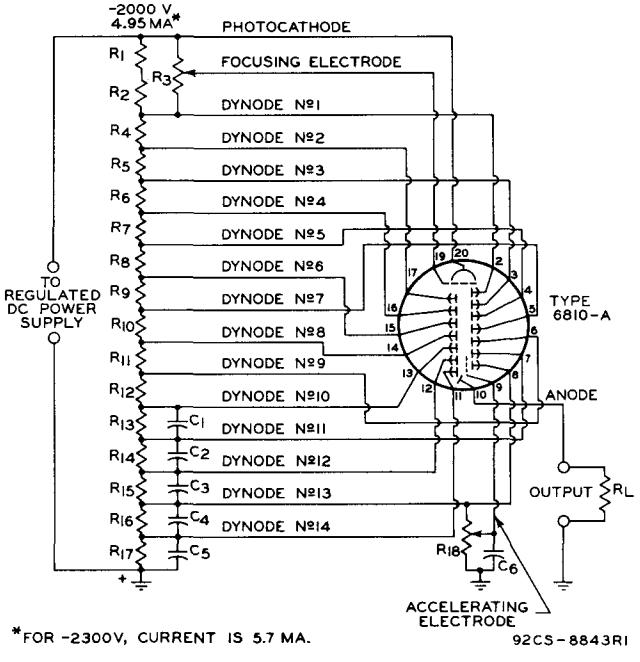

C_1 = 25 μμf, disk ceramic, 600 volts (dc working)
C_2 = 50 μμf, disk ceramic, 600 volts (dc working)
C_3 = 100 μμf, disk ceramic, 600 volts (dc working)
C_4 = 250 μμf, disk ceramic, 600 volts (dc working)
C_5 = 500 μμf, disk ceramic, 600 volts (dc working)
C_6 = 100 μμf, disk ceramic, 1000 volts (dc working)
R_1 = 24000 ohms, 1 watt
R_2 = 22000 ohms, 1 watt
R_3 = 1 megohm, 2 watts, adjustable
R_4 through R_{13} = 22000 ohms, 1 watt
R_{14} = 27000 ohms, 2 watts
R_{15} = 33000 ohms, 2 watts
R_{16} = 39000 ohms, 2 watts
R_{17} = 43000 ohms, 2 watts
R_{18} = 10 megohms, 2 watts, adjustable
R_L = Value will depend on magnitude of peak pulse voltage desired. For a peak pulse amplitude of 100 volts, the value is approximately 300 ohms.

Note: Capacitors C_1 through C_6 should be connected at tube socket.

Fig. 13 - Voltage-Divider Arrangement for Type 6810-A Used in Low-Light, Low-Noise, High-Gain Service.

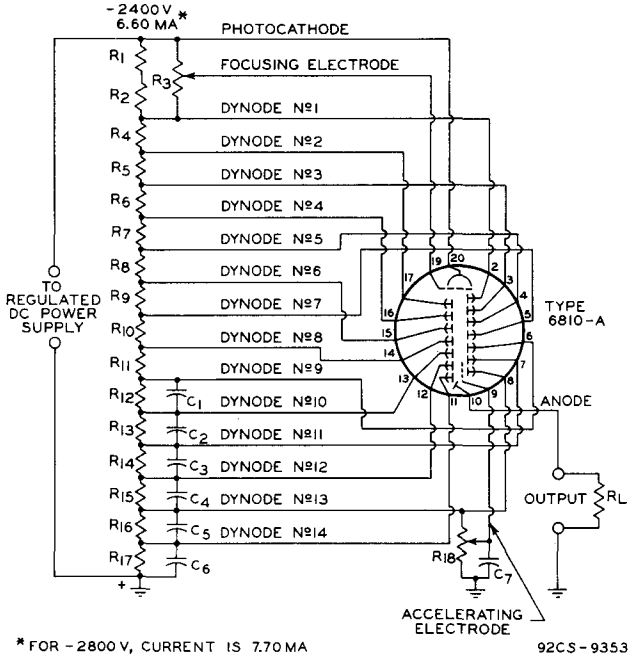

C_1 = 25 μμf, disk ceramic, 600 volts (dc working)
C_2 = 39 μμf, disk ceramic, 600 volts (dc working)
C_3 = 150 μμf, disk ceramic, 600 volts (dc working)
C_4 = 750 μμf, disk ceramic, 600 volts (dc working)
C_5 = 4000 μμf, disk ceramic, 600 volts (dc working)
C_6 = 40000 μμf, (4-10000 μμf disk ceramic, 600 volts (dc working) connected in parallel)
C_7 = 150 μμf, disk ceramic, 1000 volts (dc working)
R_1 = 10000 ohms, 1 watt
R_2 = 10000 ohms, 1 watt
R_3 = 1 megohm, 2 watts, adjustable
R_4 through R_8 = 10000 ohms, 1 watt
R_9 = 12000 ohms, 1 watt
R_{10} = 15000 ohms, 1 watt
R_{11} = 20000 ohms, 2 watts
R_{12} = 24000 ohms, 2 watts
R_{13} = 30000 ohms, 2 watts
R_{14} = 39000 ohms, 4 watts
R_{15} = 47000 ohms, 4 watts
R_{16} = 60000 ohms, 4 watts
R_{17} = 47000 ohms, 4 watts
R_{18} = 1 megohm, 2 watts, adjustable
R_L = Value will depend on magnitude of peak pulse voltage desired. For a peak pulse amplitude of 100 volts, the value is approximately 200 ohms.

Note: Capacitors C_1 through C_7 should be connected at tube socket.

Fig. 14 - Voltage-Divider Arrangement for Type 6810-A Used in High-Output-Pulse Service.

The *dc supply voltages* for the electrodes can be obtained conveniently from a high-voltage, vacuum-tube rectifier. The voltage for each dynode and for the anode can be supplied by spaced taps on a voltage divider across the rectified power supply. The current through the voltage divider will depend on the voltage regulation and the linearity required by the application. In general, the current in the divider should be several times the maximum value of anode current. The value should also be adequate to prevent variations of the dynode potentials by the signal current. Because of the relatively large divider current required for good regulation, the use of a rectifier of the full-wave type is recommended. Sufficient filtering will ordinarily be provided by a well-designed two-section filter of the capacitor-input type. A choke-input filter may be desirable for certain applications to provide better regulation. Inasmuch as the gain of the 6810-A is critically dependent on voltage, rapid changes in the voltage resulting from insufficient filtering of the power supply will introduce hum modulation; and slow shifts in the line voltage due to poor regulation will cause a change in the level of the output. When the dc supply voltage is provided by means of a rectifier, satisfactory regulation can be obtained by the use of a vacuum tube regulator circuit of the mu-bridge type.

In most applications, it is recommended that the positive high-voltage terminal be grounded in order that the output signal will be produced between anode and ground. This method prevents power-supply fluctuations from being coupled directly into the signal-output circuit.

Typical voltage-divider arrangements for use with the 6810-A are shown in Figs. 13 and 14.

The high voltages at which the 6810-A is operated are very dangerous. Care should be taken in the design of apparatus to prevent the operator from coming in contact with these high voltages. Precautions should include the enclosure of high-potential terminals and the use of interlock switches to break the primary circuit of the high-voltage power supply when access to the apparatus is required.

In the use of the 6810-A, as with other tubes requiring high voltages, it should always be remembered that these high voltages may appear at points in the circuit which are normally at low potential, because of defective circuit parts or incorrect circuit connections. Therefore, before any part of the circuit is touched, the power-supply switch should be turned off and both terminals of any capacitors grounded.

REFERENCES

Ralph W. Engstrom, *"Multiplier Phototube Characteristics; Application to Low Light Levels,"* Journal of the Optical Society of America, Vol.37, pp.420-431, June, 1947.

G. A. Morton and K. W. Robinson, *"A Coincidence Scintillation Counter,"* Nucleonics, Vol.4, No.2, pp.25-29, February, 1949.

W. H. Jordan and P. R. Bell *"Scintillation Counters,"* Nucleonics, Vol.5, No.4, October, 1949.

H. H. Goldsmith, *"Bibliography on Radiation Detection,"* Nucleonics, Vol.4, No.5, May, 1949.

"Properties of Scintillation Materials," Nucleonics, Vol.6, No.5, pp.70-72, May, 1950.

F. S. Johnson, K. Watanabe, and R. Tousey, *"Fluorescent Sensitized Photomultipliers for Heterochromatic Photometry in the Ultraviolet,"* Journal of the Optical Society of America, Vol.41, No.10, pp.702-708, October, 1951.

R. T. Wright, *"Scintillation Response of Phosphors at Low Particle Energies"*, Physical Review, Vol.96, pp.569-570, November 1, 1954.

C. J. Borkowski and R. L. Clark, *"Gamma-Ray Energy Resolution with NaI-TlI Scintillation Spectrometers"*, The Review of Scientific Instruments, Vol.24, No.11, pp.1046-1050, November, 1953.

R. K. Swank and W. L. Buck, *"Decay Times of Some Organic Scintillators"*, The Review of Scientific Instruments, Vol.26, pp.15-16, January, 1955.

R. F. Post and N. S. Shiren, *"Performance of Pulsed Photo-Multiplier Scintillation Counters"*, Physical Review, Vol.78, p.81, April, 1950.

W. Widmaier, R. W. Engstrom, and R. G. Stoudenheimer, *"A New High-Gain Multiplier Phototube For Scintillation Counting"*. IRE Transactions of the Professional Group On Nuclear Science, Vol.NS-3, No.4, November, 1956.

Robert K. Swank and John S. Moenich, *"Potting Photomultiplier Tubes"*, Nucleonics, Vol.12, pp.41-42, August, 1954.

Devices and arrangements shown or described herein may use patents of RCA or others. Information contained herein is furnished without responsibility by RCA for its use and without prejudice to RCA's patent rights.

DIMENSIONAL OUTLINE

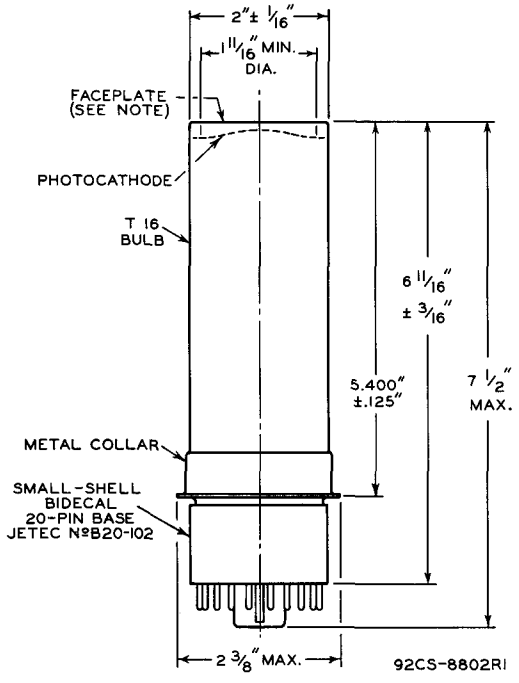

℄ OF BULB WILL NOT DEVIATE MORE THAN 2° IN ANY DIRECTION FROM THE PERPENDICULAR ERECTED AT THE CENTER OF BOTTOM OF THE BASE.

NOTE: WITHIN 1-11/16" DIAMETER, DEVIATION FROM FLATNESS OF EXTERNAL SURFACE OF FACEPLATE WILL NOT EXCEED 0.010" FROM PEAK TO VALLEY.

SOCKET CONNECTIONS
Bottom View

PIN 1: NO CONNECTION
PIN 2: DYNODE No.1
PIN 3: DYNODE No.3
PIN 4: DYNODE No.5
PIN 5: DYNODE No.7
PIN 6: DYNODE No.9
PIN 7: DYNODE No.11
PIN 8: DYNODE No.13
PIN 9: GRID No.2 (ACCELERATING ELECTRODE)
PIN 10: ANODE

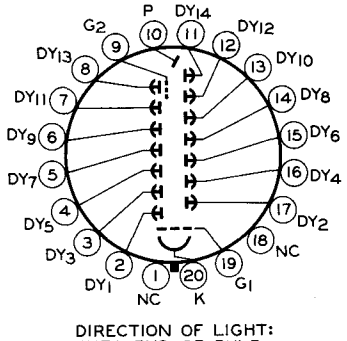

DIRECTION OF LIGHT: INTO END OF BULB

PIN 11: DYNODE No.14
PIN 12: DYNODE No.12
PIN 13: DYNODE No.10
PIN 14: DYNODE No.8
PIN 15: DYNODE No.6
PIN 16: DYNODE No.4
PIN 17: DYNODE No.2
PIN 18: NO CONNECTION
PIN 19: GRID No.1 (FOCUSING ELECTRODE)
PIN 20: PHOTOCATHODE