from JEDEC release
#4599, Feb. 17, 1964

Burroughs Corporation

ELECTRONIC COMPONENTS DIVISION
PLAINFIELD, NEW JERSEY

Bulletin No. 1051

6702

October 15, 1963

(BD-401) Wide Band Noise Generating High Vacuum Electron Tube

The 6702 (BD-401) is a wide-band noise-generating high-vacuum electron tube with an external permanent magnet. It is capable of producing a minimum of .08 mW of wide-band noise over a frequency range of 200 to 400 MC.

ELECTRICAL CHARACTERISTICS

RATINGS, ABSOLUTE MAX.	VALUE	NOTES
Target Voltage (Eta)	300 Vdc	
Beam Forming Voltage (Ebf)	300 Vdc Max. −150 Vdc Min.	
Anode Voltage (Ebb)	300 Vdc	
Heater Cathode Voltage (Ehk)	±100 V.	
Individual Target Dissipation (P/ta)	1 W	
Heater Voltage (Ef)	6.3V ± 5%	
Cathode Current (Ik)	42 mA	

ENVIRONMENTAL CHARACTERISTICS

Shock	G=350,1 ± .5 msec. duration; half sine wave pulse	3
Vibration	10-50-10 cps .08 total excursion; tube not operating	4, 5
Altitude	60,000 ft.	

MECHANICAL CHARACTERISTICS

Outline	See Figure 1
Envelope Connection	See Figures 2, 3
Mounting Position	Any
Weight	7.5 oz.

TEST CONDITIONS AND TEST LIMITS

The 6702 (BD-401) is tested in the circuit shown in figure 4 with the components mounted as closely as possible to the tube socket consistent with good high frequency packaging techniques.

TEST CONDITIONS	VALUE	NOTES
Target Resistance (Rta)	5 Kohm 1% 7.5 W	
Target Voltage (Eta)	200 Vdc	
Beam Forming Spade Voltage (Ebf)	−100 Vdc	
Anode Voltage (Ebb)	200 Vdc	
Heater Voltage (Ef)	6.3 V	
Frequency	200 to 400 MC	2

TEST LIMITS	VALUE	NOTES
Noise Output	0.08 mW min.	1
Target Current (Ita)		
Maximum	33 mAdc	
Minimum	22 mAdc	
Anode Current (Ib)	7.0 mAdc max.	

NOTES:

1. Noise output is measured with a Hewlett-Packard Power Meter, Model 431A and Thermistor Mount Model 478A, and an arrangement of attenuator pads, low and high pass filters to give a band pass characteristic, of 200 to 400 Mc. See Figure 5.

2. In order to avoid possible operational changes in the characteristics of this tube, do not place the tube in close proximity (less than 6") to magnetic fields, and (less than 4") to ferrous materials.

3. Each tube shall be subjected to a total of 20 shocks; that is, five shocks in each of positions X-1, X-2, Y-1, and Y-2 in any sequence.

4. Magnet only is to be held rigidly. Socket must float in order not to disturb the magnetic field alignment of the tube.

5. The tube shall be vibrated in positions X-1, and X-2 for 5 minutes in each plane.

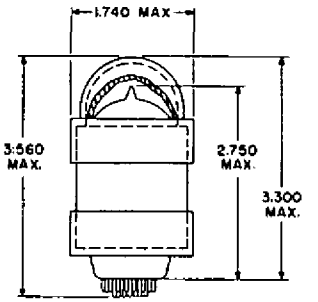

FIG. 1. OUTLINE DRAWING

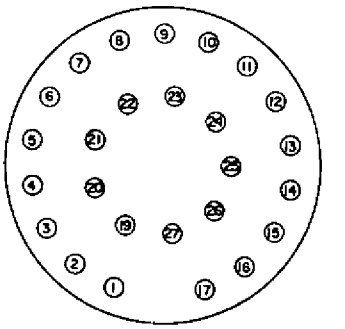

FIG. 2. PIN NUMBERING DIAGRAM

Pin Number	Element	Pin Number	Element
1	Beam Form 1	14	Anode
2	Anode	15	Anode
3	Anode	16	Anode
4	Anode	17	Target-1
5	Anode	19	Anode
6	Anode	20	Anode
7	Anode	21	Heater
8	Target 2	22	Anode
9	Beam Form 2	23	Anode
10	Anode	24	Anode
11	Not Used	25	Heater
12	Anode	26	Anode
13	Anode	27	Cathode

FIG. 3 PIN CONNECTION CHART

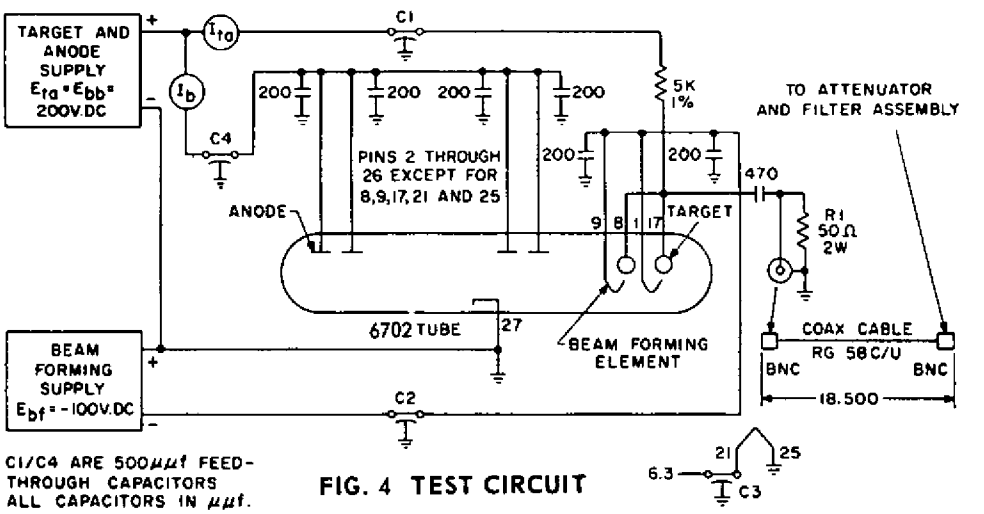

FIG. 4 TEST CIRCUIT

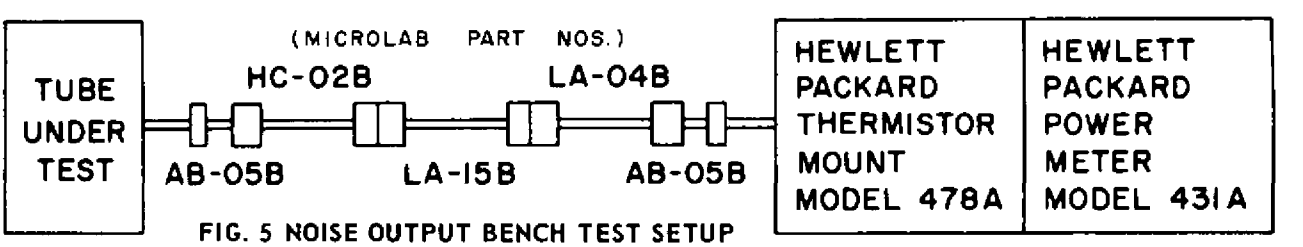

FIG. 5 NOISE OUTPUT BENCH TEST SETUP

The information contained in this brochure does not necessarily imply a license under patents or pending applications of Burroughs Corp. or assure a freedom from patent rights of others. No warranties of any kind are either expressed or implied by reason of this publication.