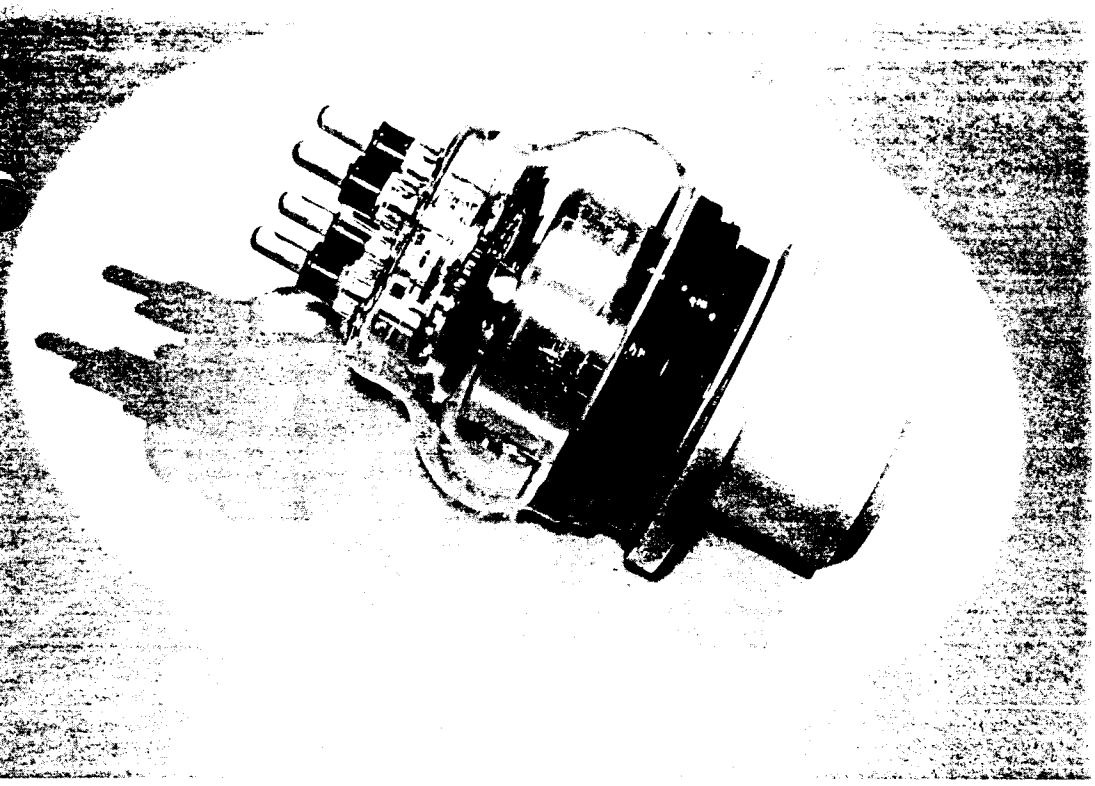

MACHLETT

ML-6576

DESCRIPTION & RATINGS

DESCRIPTION

The ML-6576 is a three-electrode tube designed specifically for use as a modulator or amplifier in broadcast and communication service, and as an R-F amplifier in single-sideband transmission systems where low distortion is of utmost importance. The ML-6576 is mechanically equivalent to the ML-356 tube; filament characteristics are also identical. Features include rugged kovar-glass seals and rigidly supported grid and filament assemblies. The anode is water cooled and is capable of dissipating 22.5 kW with a water flow of approximately 12 gpm. The cathode is a thoriated-tungsten, stress-free filament employing no sliding contacts, insulators or tension springs. Maximum ratings of 12 kVdc plate voltage and 45 kW plate input apply at frequencies up to 25 Mc.

GENERAL CHARACTERISTICS

Electrical

Filament Voltage	7.5	Volts
Filament Current at 7.5 Volts	170	Amps
Filament Starting Current, maximum	800	Amps
Filament Cold Resistance	0.0056	Ohms
Amplification Factor	5.5	
Interelectrode Capacitances:		
Grid-Plate	44	uuf
Grid-Filament	33	uuf
Plate-Filament	4.0	uuf

Mechanical

Mounting Position	Vertical, anode down	
Type of Cooling	Water and Forced Air	
Water Flow on anode, minimum for 22.5 kW dissipation	12	gpm*
Maximum outgoing water temperature	70	°C
Air flow on center of dish from 3" nozzle	50	cfm†
Maximum Glass Temperature	165	°C
Net Weight, approximate	14	lbs.

*This rate of water flow applies when Machlett Water Jacket F-10690 with spiral is employed.

†At frequencies above 10 Mc, more air flow may be necessary; special attention should be given to adequate ventilation of the dish and seals to keep the temperature at the hottest point below 165°C. Heat radiating connectors for grid and filament posts are recommended.

MAXIMUM RATINGS AND TYPICAL OPERATING CONDITIONS
(Continuous Commercial Service)

Audio-Frequency Power Amplifier and Modulator Class AB

Maximum Ratings, Absolute Values

D-C Plate Voltage	12000	volts
Max.-Signal D-C Plate Current*	5.0	amps
Max.-Signal Plate Input*	45	kW
Plate Dissipation*	22.5	kW

Typical Operation (Values are for two tubes)

D-C Plate Voltage	10000	12000	volts
D-C Grid Voltage	-1800	-2150	volts
Peak A-F Grid-to-Grid Voltage	3550	4250	volts
Peak A-F Plate-to-Plate Voltage	14000	19000	volts
Zero-Signal D-C Plate Current	1.8	1.8	amps
Max-Signal D-C Plate Current	7.6	5.7	amps
Effective Load Resistance, Plate-to-Plate	2300	4200	ohms
Max.-Signal Driving Power, approx.	0	0	kW
Max.-Signal Power Output, approx.	42	43	kW

Radio-Frequency Power Amplifier Class AB Single-Sideband

Two-tone test conditions per tube

Maximum Ratings, Absolute Values

D-C Plate Voltage	12000	volts
D-C Plate Current	5.0	amps
Plate Input	45	kW
Plate Dissipation	22.5	kW

Typical Operation

D-C Plate Voltage	10000	volts
D-C Grid Voltage	-1900	volts
D-C Plate Current	3.0	amps
D-C Grid Current, approximate	0	mA
Driving Power, approximate**	0	kW
Peak Envelope Power Output, approximate	36	kW

Radio-Frequency Power Amplifier Class B

Carrier conditions per tube for use with a maximum modulation factor of 1.0

Maximum Ratings, Absolute Values

D-C Plate Voltage	12000	volts
D-C Plate Current	4.0	amps
Plate Input	40	kW
Plate Dissipation	15	kW

Typical Operation

D-C Plate Voltage	12000	volts
D-C Grid Voltage	-2150	volts
Peak R-F Grid Voltage	1375	volts
Peak R-F Plate Voltage	10000	volts
D-C Plate Current	3.0	amps
D-C Grid Current	0	mA
Driving Power, approximate**	100	watts
Power Output, approximate	12	kW

R-F Power Amplifier and Oscillator Class C Telegraphy

Key-down conditions per tube without amplitude modulation‡

Maximum Ratings, Absolute Values

D-C Plate Voltage	10000	volts
D-C Grid Voltage	-2400	volts
D-C Plate Current	6.0	amps
D-C Grid Current	0.20	amp
Plate Input	60	kW
Plate Dissipation	22.5	kW

Typical Operation

D-C Plate Voltage	8000	volts
D-C Grid Voltage	-2000	volts
Peak R-F Grid Voltage	2600	volts
Peak R-F Plate Voltage	6700	volts
D-C Plate Current	4.9	amps
D-C Grid Current, approximate	0.12	amp
Driving Power, approximate	300	watts
Power Output, approximate	29	kW

* Averaged over any audio-frequency cycle of sine-wave form.
** At crest of audio-frequency cycle with modulation factor of 1.0.
‡ Modulation essentially negative may be used if the positive peak of the envelope does not exceed 115% of the carrier conditions.

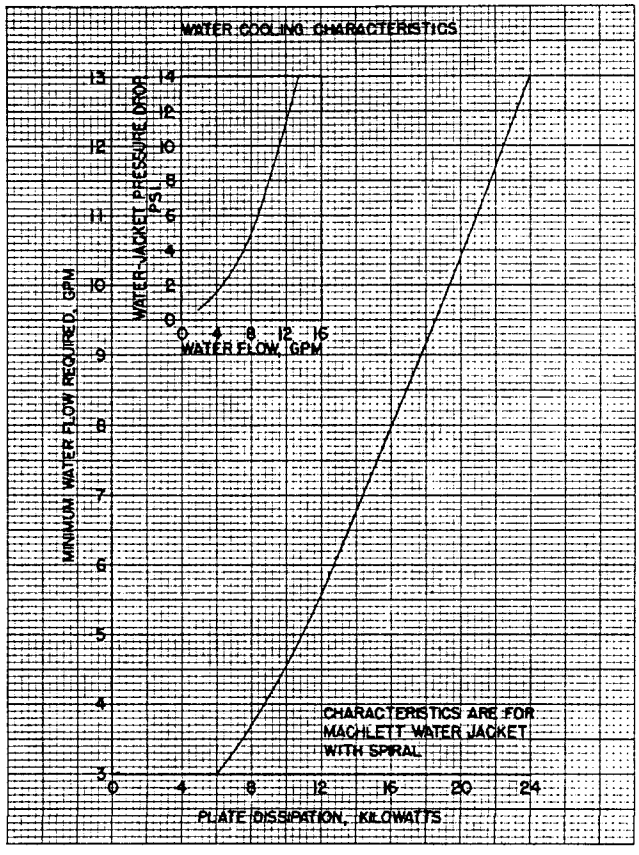

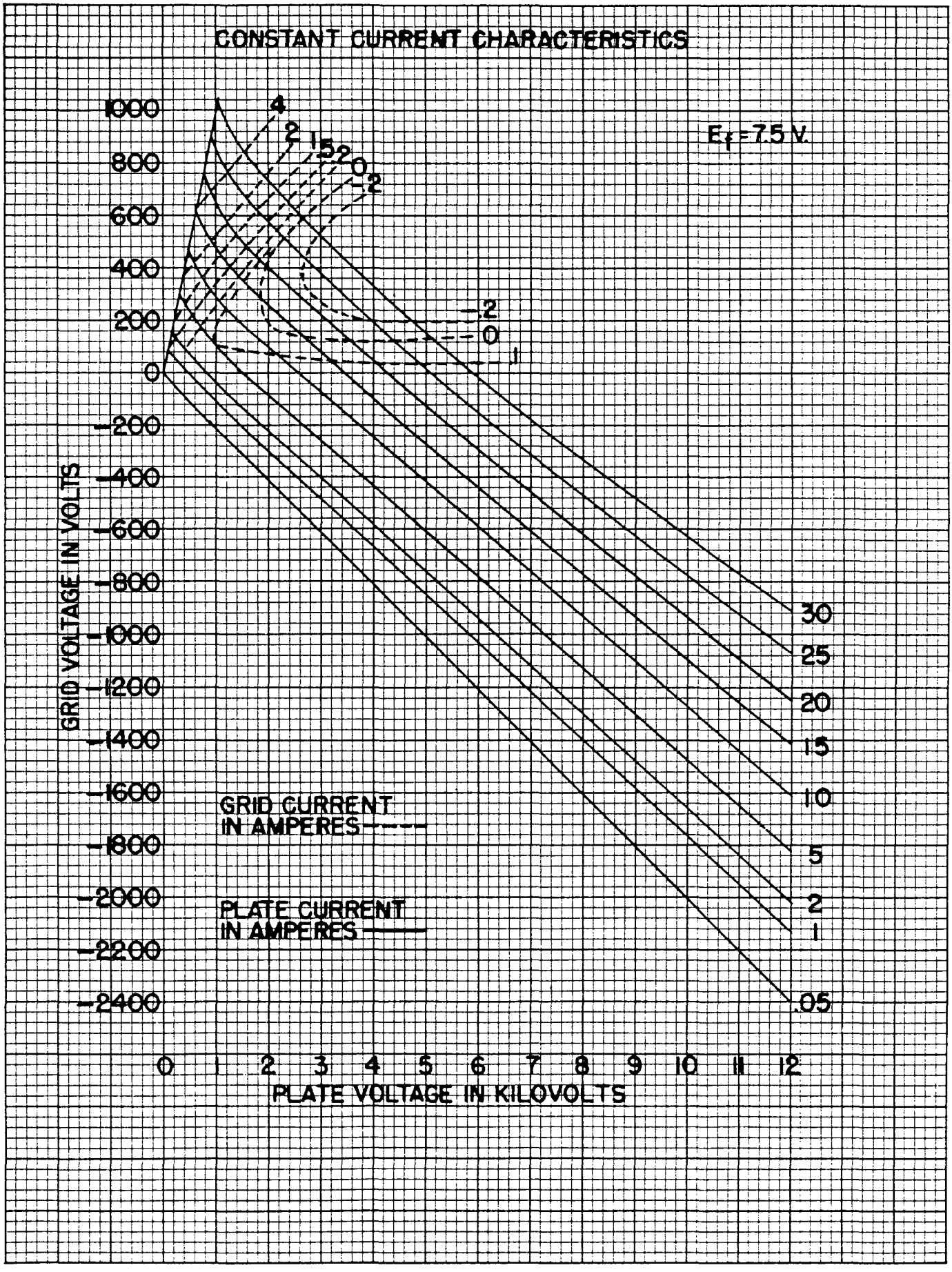
CONSTANT CURRENT CHARACTERISTICS
E_f = 7.5 V.
GRID VOLTAGE IN VOLTS
1000
800
600
400
200
0
-200
-400
-600
-800
-1000
-1200
-1400
-1600
-1800
-2000
-2200
-2400
4
2
1.5
2
0
-2
-2
0
1
30
25
20
15
10
5
2
1
.05
GRID CURRENT IN AMPERES
PLATE CURRENT IN AMPERES
0 1 2 3 4 5 6 7 8 9 10 11 12
PLATE VOLTAGE IN KILOVOLTS

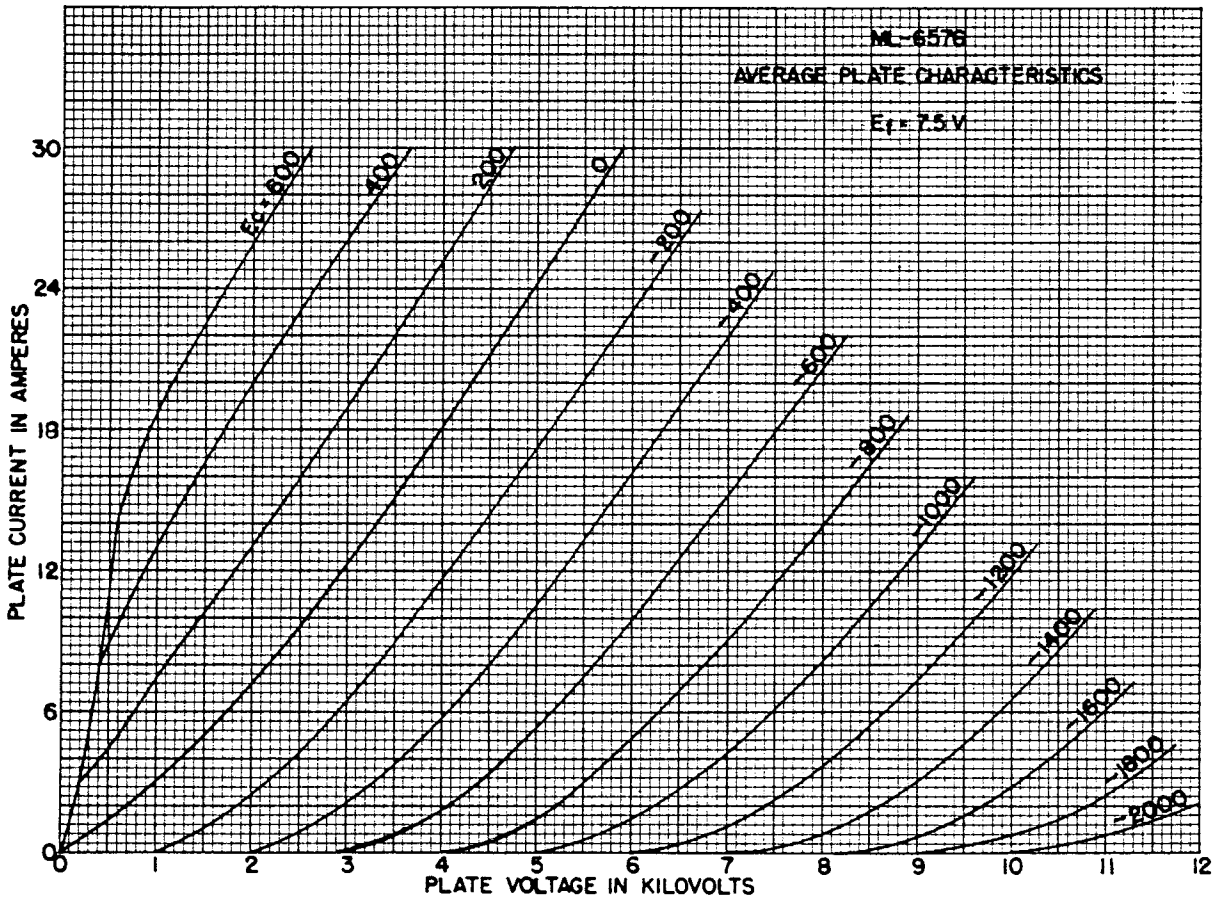

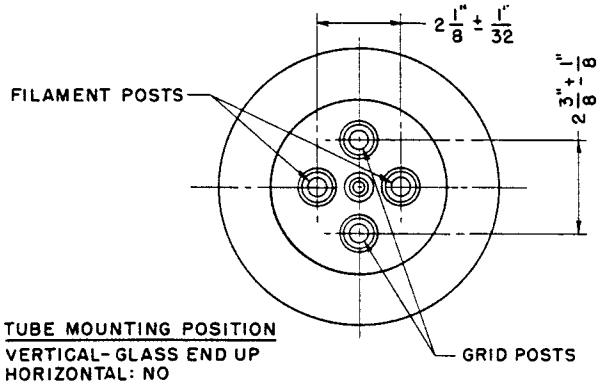

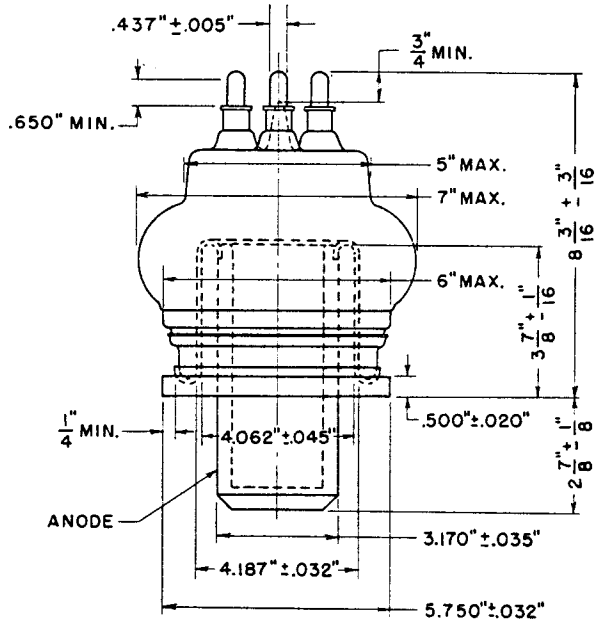

MACHLETT LABORATORIES, INC.

SPRINGDALE MACHLETT CONNECTICUT

U. S. A.

PRINTED IN U.S.A.