MECHANICAL DATA

Shock (Non-Operating)	10 G
Vibration (Non-Operating)	10-150 cps—5 G
Mounting Position	Any
Overall Dimensions	5⅞ x 3³⁄₁₆ x 5⅞ Inches
Net Weight	7.5 Lbs. approx.
Cooling	Forced Air
Pressurization	50 psi abs.
Output Coupling	See Drawing

ELECTRICAL DATA

HEATER CHARACTERISTICS

Heater Voltage—Preheat[1]	5.0 ± 10% Volts
Heater Current at 5.0 Volts	2.6 — 3.2 Amps
Minimum Preheat Time	3 Minutes

RATINGS (Absolute Maximum)[2]

Heater Voltage	6.0 Volts
Peak Current	18 Amps
Peak Anode Voltage	16 kv
Peak Power Input	270 kw
Frequency Pulling at VSWR 1.5/1	30 mc
Anode Temperature	130° C
Pulse Duration	0.5 μsecond
Duty Cycle	0.0007
Minimum Pulse Voltage Rise Time	0.08—0.1 μsecond
VSWR	1.5/1
R F Bandwidth	15 mc

TYPICAL OPERATION

	Oscillation 1	
Pulse Recurrence Frequency	4000 pps	
Pulse Duration	0.150 μsecond	
Peak Anode Voltage	14 kv	
Peak Anode Current	15 Amps	
Average Anode Current	9 Ma	
Useful Range of Average Current	6-11 Ma	
Average Power Output	24 Watts	Min.
Input Capacitance	8 μμf	

NOTES:

1. *Heater voltage must be reduced to zero after the application of high voltage.*
2. *The values specified are based on the "absolute system" and are not to be exceeded under any service conditions. The ratings are limiting values above which serviceability of any individual tube may be impaired. It does not necessarily follow that combinations of absolute maximum ratings can be attained simultaneously.*

QUICK REFERENCE DATA

The Sylvania Type 6551 is a medium power, pulsed fixed frequency (23800—24270 mc) magnetron.

The unit is supplied with magnet in place.

SYLVANIA ELECTRIC PRODUCTS INC.

ELECTRONICS DIVISION
WOBURN, MASS.

Prepared and Released By The
TECHNICAL PUBLICATIONS SECTION
EMPORIUM, PENNSYLVANIA

JULY 1956

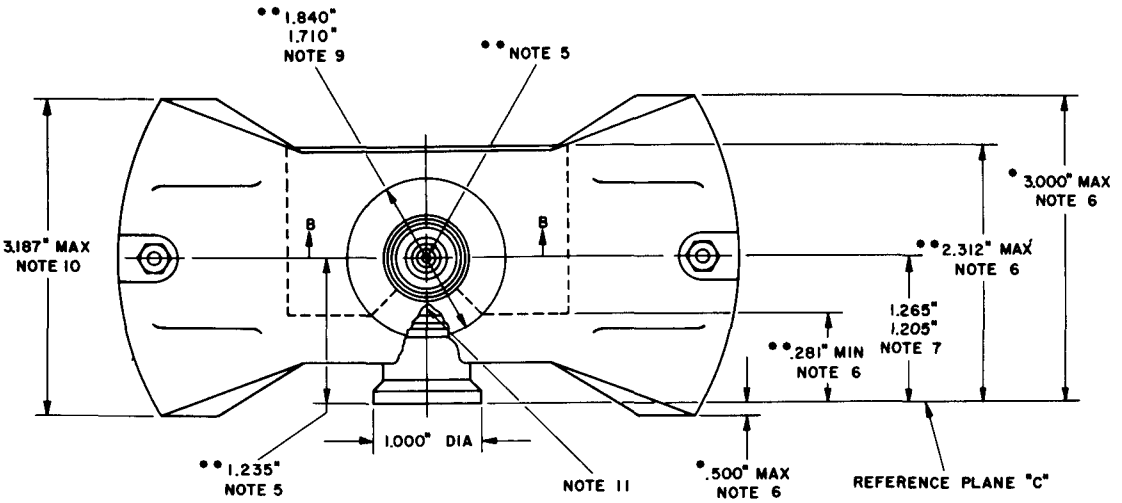

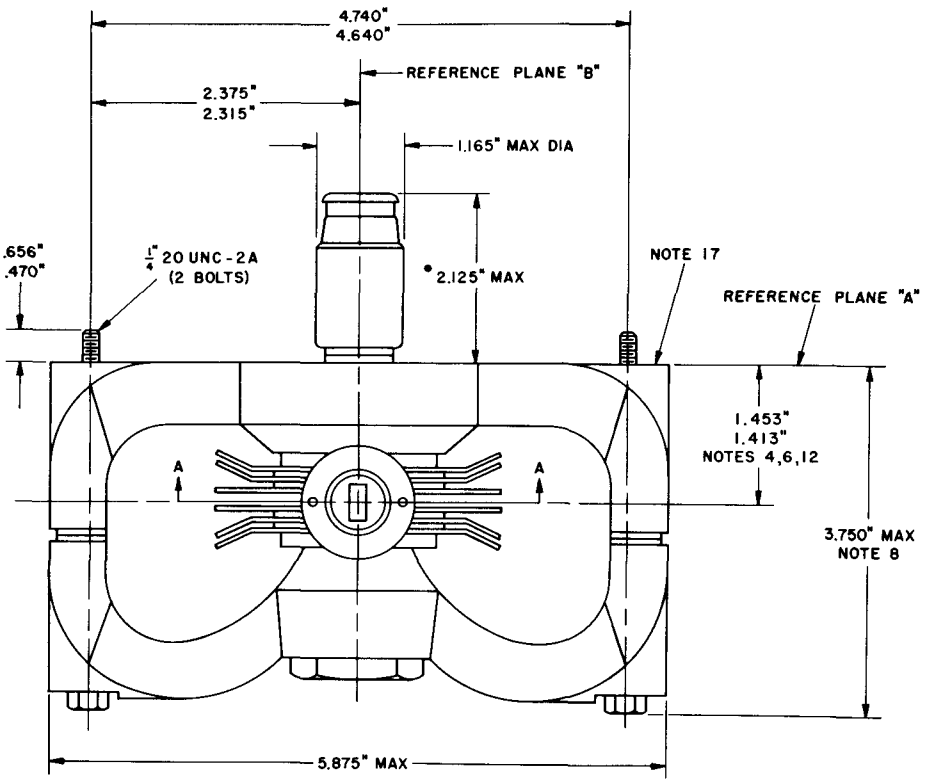

**Qualification approval measurements.

*Design test measurements.

Production—all other dimensions and notes.

FOR SECTION "A-A" & B-B
SEE PAGE 3

All dim's in inches

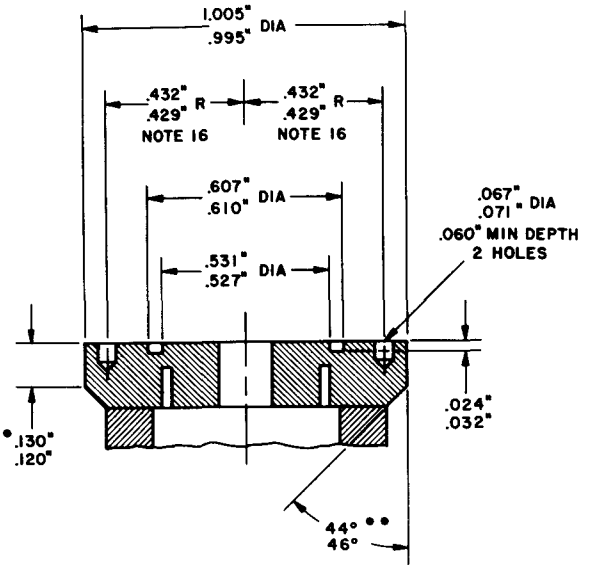

PARTIAL SECTION A-A

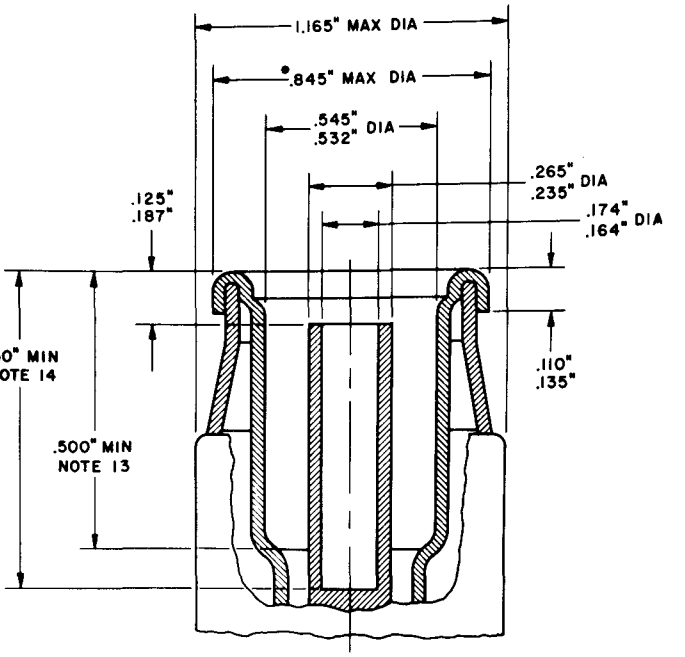

PARTIAL SECTION B-B

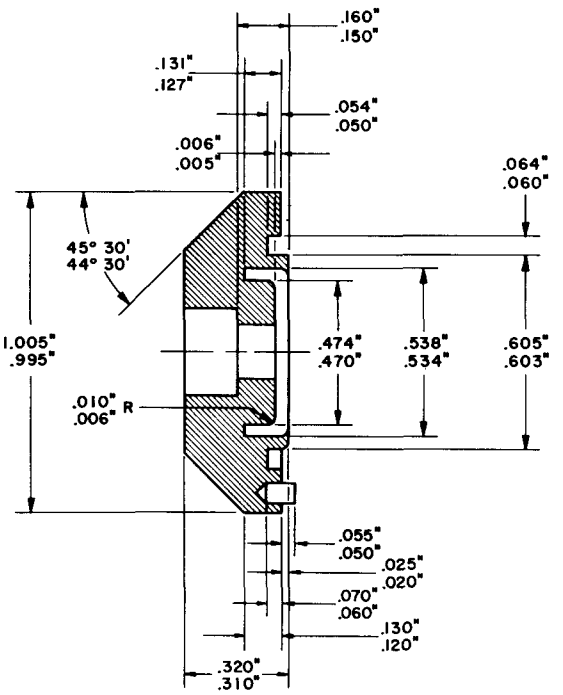

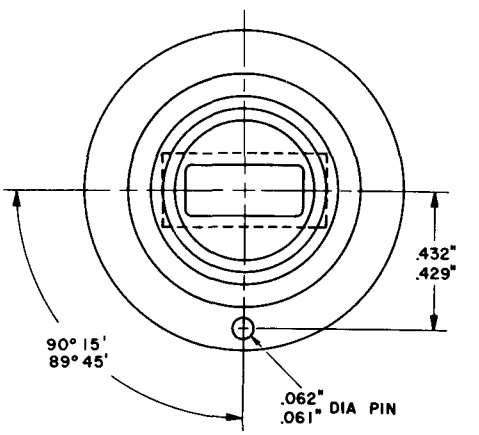

MATING CONNECTION FOR OUTPUT TERMINAL

DRAWING NOTES:

1. Ref. plane "A" is defined as a plane passing through the finished surface of the magnet as shown.
2. Ref. plane "B" is defined as a plane passing through the center of the output and perpendicular to ref. plane A.
3. Ref. plane "C" is defined as a plane perpendicular to planes "A" and "B" at the face of the output.
4. This dimension refers to centerline of tube.
5. Center of cathode bushing may vary from true location by .125 (See Note 7).
6. Includes angular as well as lateral deviations.
7. This dimension applies to location of mounting bolts with respect to ref. plane C.
8. This dimension applies either to head of magnet bolt or top of exhaust cap or magnet coating.
9. Applies to flat on top of magnet.
10. Refers to size of coated magnet only.
11. Temperature is measured at this point.
12. Centerline of drilled holes in output flange may vary from true location by .007.
13. This dimension refers to .532–.545 dia.
14. This dimension refers to .164–.174 dia.
15. Alignment of the electric vector shall be perpendicular to Ref. plane "B".
16. Refers to centerline of .607–.610 dia.
17. This surface to be flat within .010.