Vacuum tube KT88, 6550 Tung - Sol is a beam tetrode in the glass bulb with octal base,with equipotential cathode, designed to amplify low frequency power in the output stages of HI - FI audio.

Pin arrangement

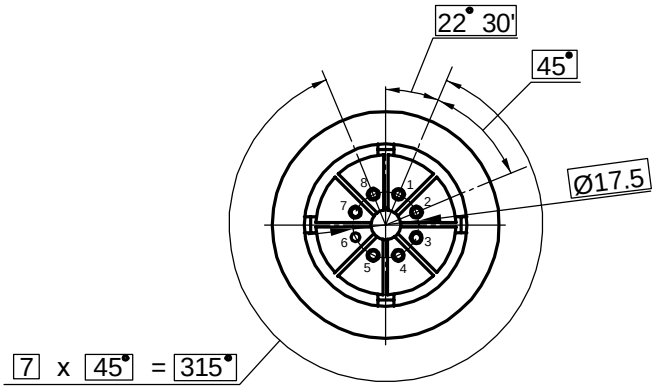

Electrode -to - lead connection diagram

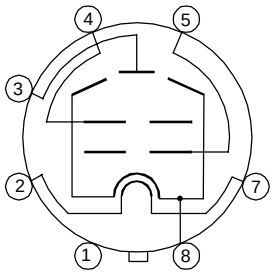

Dimensions

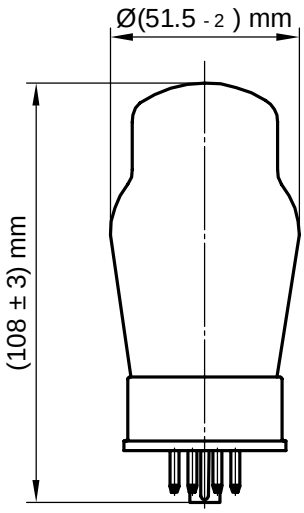

Lead designation	Name of electrode
1	Outer metal screen
2, 7	Heater
3	Plate
4	Grid 2
5	Grid 1
6	No
8	Cathode, beam-forming screen

Electrical parameters

Parameters, conditions and units	Nominal	
	min	max
First grid reverse current, μA (at: filament voltage 6.3 V, plate voltage 400 V, first grid voltage minus 16.5 V, second grid voltage 225 V, first grid circuit resistance 0.051MΩ)	—	0.7
Heater current, A	1.5	1.7
Plate current, mA (at: filament voltage 6.3 V, plate voltage 400 V, first grid voltage minus 16.5 V, second grid voltage 225 V)	75	125
Second grid current, mA (at: filament voltage 6.3 V, plate voltage 400 V, first grid voltage minus 16.5 V, second grid voltage 225 V)	2	9.5
Output power, W (at: filament voltage 6.3 V, plate voltage 400 V,first grid voltage minus 16.5 V, second grid voltage 225 V, plate circuit resistance 3.0 k Ω first grid alternating voltage, efficacious 11.7 V)	14	—
First grid cut-off voltage, negative, V (at: filament voltage 6.3 V, plate voltage 400 V, second grid voltage 225 V,)	—	58
Slope of characteristic, mA/V (at: filament voltage 6.3 V, anode voltage 400 V,first grid voltage minus 16.5 V, second grid voltage 225 V)	8.2	—
Distortion factor,% (at: filament voltage 6.3 V, plate voltage 400 V, first grid voltage minus 16.5 V, second grid voltage 225 V, plate circuit resistance 3.0 k Ω first grid alternating voltage, efficacious 11.7 V)	—	18.0
Cahtode - heater insulation resistance, M Ω at: filament voltage 6.3 V, cathode -heater voltage + 300 V)	10.0	—

Operating conditions limits

Parameters, units	Nominal	
	triod connection	tetrod connection
Filament voltage, V, min	5.7	5.7
max	6.9	6.9
Cathode - heater voltage, pulse:		
positive polarity at the cathode (average level of the constant component ⩽ 300V),V, max	300	300
negative polarity at the cathode (average level of the constant component ⩽100V),V, max	200	200
Cathode current, mA	230	192.5
First grid voltage: negative, V, max	300	300
positive, V, max	0	0
Power dissipation at the plate, W, max	42	44
Power dissipation at the second grid, W, max	6.6	6.6
First grid circuit resistance, MΩ, max fixed bias self - bias	 0.051 0.1	 0.051 0.1
Temperature at the most heated part of the envelope, K°	523	523
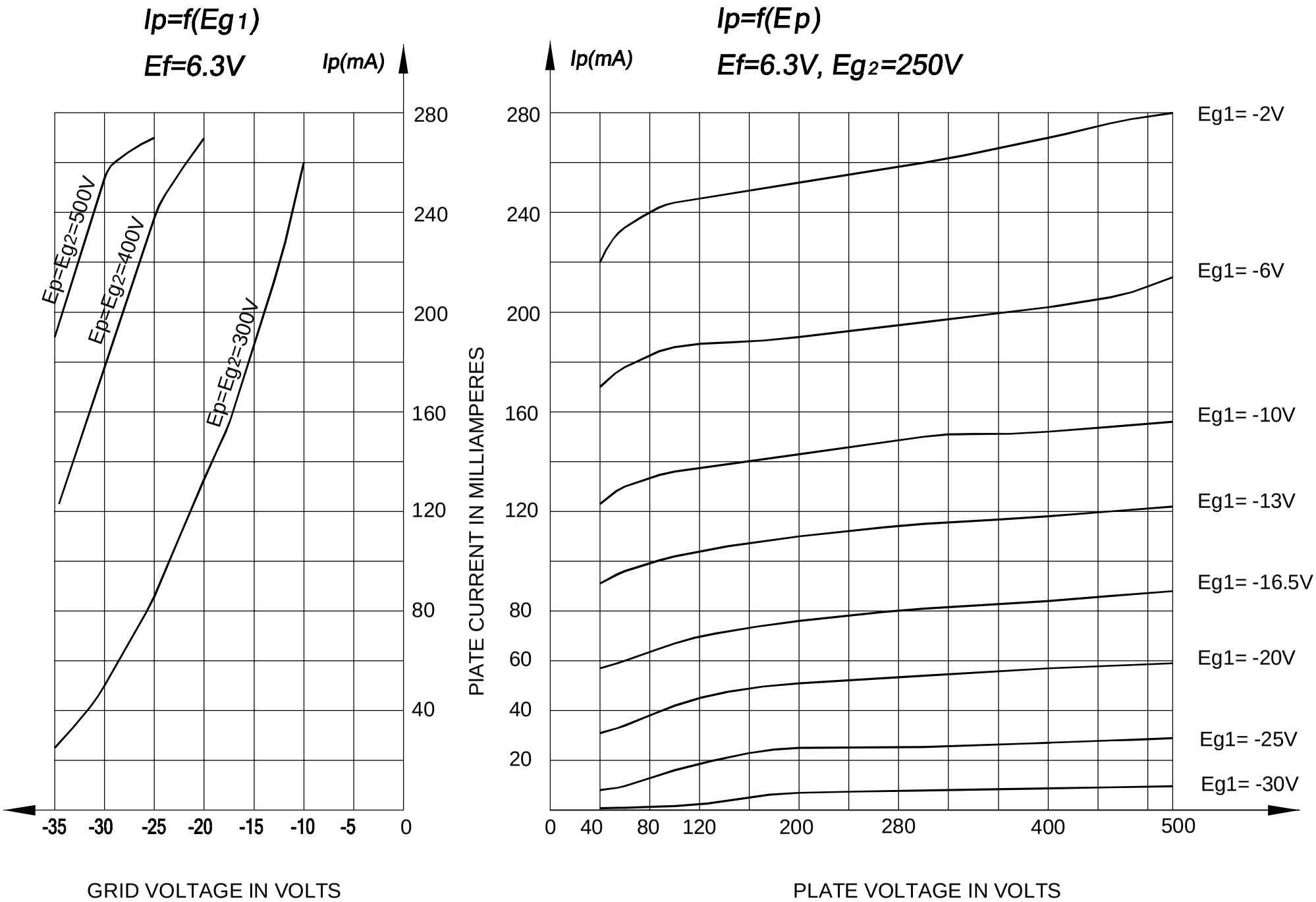
KT88, 6550 Tung - Sol