DESCRIPTION AND RATING

TEMPERATURE-CONTROLLED IGNITRON GL-6515

The GL-6515 is a mercury-pool tube of permanently sealed steel construction designed for rectifier service in the 125-, 250-, 600-, and 900-volt d-c power fields. It is suitable for use in rectifiers rated up to 2000 kilowatts output, depending on the number of ignitrons used, the output voltage, and the circuit. Continuous average current rating is 400 amperes per tube in such service. The tube is also designed for 2400-volt a-c control service where it has a rating of 4800 kilovolt amperes.

This tube is identical in ratings and characteristics to the GL-5564/GL-507. Mechanically, it has the additional feature of an integral temperature-control device with protective features. The control includes a switch which operates a solenoid valve in the water-supply line to the tube in response to increasing and decreasing tube temperature, thus maintaining the amount of cooling water to the minimum required by the operating conditions. It also includes an over-temperature switch which may be used to remove power from the ignitron when its temperature exceeds a safe value.

This new construction prevents excessive condensation over the external parts of the tube under conditions of high humidity. Another advantage is the appreciable saving in maintenance costs over tubes of the old design since this control feature, in addition to greatly reducing the amount of water required, eliminates the necessity for such safety devices as water-flow relays, water over-temperature relays, and water-pressure interlocks required with the older design tubes. In applications where the cooling water flows through two or three tubes in series, this tube can be used with the GL-5564/GL-507 since the GL-6515, in the position nearer the water drain where it receives the warmer water, can control the flow to all under normal conditions.

Like its prototype, the GL-6515 has an auxiliary anode and two ignitors. Excitation of the auxiliary anode permits stabilizing the cathode spot for very small anode currents. The two ignitors assure long life since only one is used at a time. Phase control of the ignitor impulses permits voltage control of the rectified output. In common with other ignitrons arc losses in the GL-6515 are low, and design and construction features inherent in the steel-jacketed construction assure ease of installation, economical use of space, and reliability of operation.

TECHNICAL INFORMATION

GENERAL

Electrical

Cathode Excitation - Cyclic
Cathode Spot Starting - Ignitor

Number of Electrodes	
Main Anodes	1
Main Cathodes	1
Auxiliary Anodes	1
Ignitors	2
Control Grids	1

from JETEC release #1378, Dec. 6, 1954

Electrical (Cont'd)

Arc Drop at 1200 Peak Amperes	18.2 ± 0.1	Volts
Arc Drop at 8000 Peak Amperes	35 ± 0.1	Volts
Cathode Excitation Requirements		
Ignitor Voltage Required to Fire	450	Volts
Ignitor Current Required to Fire	45	Amperes
Starting Time at Required Voltage or Current	100	Microseconds
Peak Excitation Arc Current Required, minimum	6	Amperes
Excitation Arc-Drop Voltage	12	Volts
Grid Requirements*		
Minimum Voltage to Establish Conduction	50	Volts
Minimum Voltage to Prevent Conduction	100	Volts
Positive Current to Establish Conduction	0.1	Amperes

Mechanical

Envelope Material - Stainless Steel		
Net Weight	90	Pounds

Thermal

Type of Cooling - Water		
Inlet Water Temperature ≠, minimum	0	C
Inlet Water Temperature ≠, maximum		
Power-Rectifier Service		
Peak Inverse Anode Voltage = 900 Volts	50	C
Peak Inverse Anode Voltage = 2100 Volts	40	C
AC Control Service		
Voltage = 250 Volts RMS	30	C
Voltage = 600 Volts RMS	30	C
Voltage = 2400 Volts RMS	30	C
Water Flow, minimum		
At Continuous Rated Average Current	6	Gallons per Minute
Characteristics for Water Cooling at Rated Minimum Flow		
Water Temperature Rise, maximum	19	C
Pressure Drop at 6 Gallons per Minute, maximum	1	Pound per Square Inch

≠ Dependent upon load conditions. For substantially constant load 0 C is is satisfactory. For widely fluctuating loads 25 C is required.

MAXIMUM RATINGS AND TYPICAL OPERATION

Power-Rectifier Service, Continuous Duty
Ratings are for Zero-Phase-Control Angle

Maximum Peak Anode Voltage			
Inverse	900	2100	Volts
Forward	900	2100	Volts
Maximum Anode Current			
Peak	3600	2400	Amperes
Average			
Continuous	400	300	Amperes
Two-Hours - Averaged Over Any Two-Minute Interval	600	450	Amperes
One-Minute - Averaged Over Any One-Minute Interval	800	600	Amperes
Fault	25,000	19,000	Amperes
Maximum Duration of Fault Current	0.15	0.15	Seconds
Frequency Range	25-60	25-60	Cycles per Second

AC Control Service
Two Tubes in Inverse Parallel, Ratings per Tube

Voltage	250	600	2400	Volts RMS
Maximum Demand	1500	3600	4800	Kilovolt-Amperes
Average Current at Maximum Demand	850	530	270	Amperes
Maximum Average Current	850	850	414	Amperes
Demand at Maximum Average Current	1500	1600	2210	Kilovolt-Amperes
Maximum Averaging Time	9	3.4	1.66	Seconds
Maximum Peak Fault Current	17,000	17,000	6000	Amperes
Frequency Range	25-60	25-60	25-60	Cycles per Second

Ignitor

Maximum Voltage		
Positive - Anode Voltage		
Negative	5	Volts
Maximum Current		
Peak	100	Amperes
Root Mean Square	15	Amperes
Average	2	Amperes
Maximum Averaging Time	10	Seconds

Typical Resistance Added to Ignitor Circuit for Anode Firing		
At Anode Voltage of 600 Volts or Less	4	Ohms
At Anode Voltage of 601 Volts to 1000 Volts	10	Ohms
At Anode Voltage of 1001 Volts to 1500 Volts	20	Ohms
At Anode Voltage of 1501 to 2000 Volts	35	Ohms
At Anode Voltage of 2001 to 2400 Volts	50	Ohms

Auxiliary-Anode

Maximum Peak Forward Voltage	160	Volts
Maximum Peak Inverse Voltage		
Main Anode Conducting	25	Volts
Main Anode Not Conducting	160	Volts
Maximum Current		
Peak	30	Amperes
Average	9	Amperes
Maximum Averaging Time	10	Seconds
Root Mean Square	15	Amperes

Grid*

Maximum Peak Forward Voltage	250	Volts
Maximum Peak Inverse Voltage	300	Volts
Maximum Grid-Current		
Peak Positive	1.5	Amperes
Peak Negative	0.5	Amperes
Average	0.5	Amperes
Root Mean Square	1.0	Amperes

Temperature-Control-Switch Ratings ‡

Maximum Voltage	575	Volts
Maximum Current		
Over-Temperature Switch	6	Amperes
Water-Control Switch	1.5	Amperes
Maximum Peak Potential of Tube Water Cylinder		
Above Ground	1500	Volts
Switch-Contact Arrangement		
Over-Temperature Switch - Normally Closed (Contacts Open on Temperature Rise)		
Water-Control Switch - Normally Open (Contacts Close on Temperature Rise)		

* At main anode voltages of 500 volts and over, the grid circuits should provide a negative d-c bias of 100 volts and a suitable turn-on voltage to swing the grid positive at the time the ignitor is fired. At lower anode voltages, it is sufficient to connect the grid to the main anode through a resistor. In either case, the grid-circuit resistance should be 500 to 1000 ohms.

‡ No more than three tubes should be connected in series for water flow. When the series connection is used the temperature of the incoming water must be within the rated limit for the warmest tubes in the series.

5 RMS demand voltage, current, and kilovolt-ampere demand are all on the basis of full-cycle conduction (no phase delay) regardless of where or not phase control is used. For voltages below the minimum, the minimum-voltage current rating applies. With the use of log-log paper straight-line interpolation between tabulated points may be used for other detailed ratings of: Demand kva vs average anode current, and maximum averaging time vs anode voltage.

7 Suitable fuses should be provided in the switch circuits to prevent a power arc should a ground occur in the switch or wiring.

November 11, 1954

TUBE DEPARTMENT

GENERAL ELECTRIC COMPANY

SCHENECTADY 5, NEW YORK

GENERAL ELECTRIC

N22024AZ
CONT ON SHEET SH NO.

REV NO.
N22024AZ
CONT ON SHEET SH NO.

TITLE
OUTLINE
GL-6515

FIRST MADE FOR

NOTES:
1. ENVELOPE IS AT CATHODE POTENTIAL.
2. THERMOSTAT COVER IS AN ELECTRICAL INSULATOR.

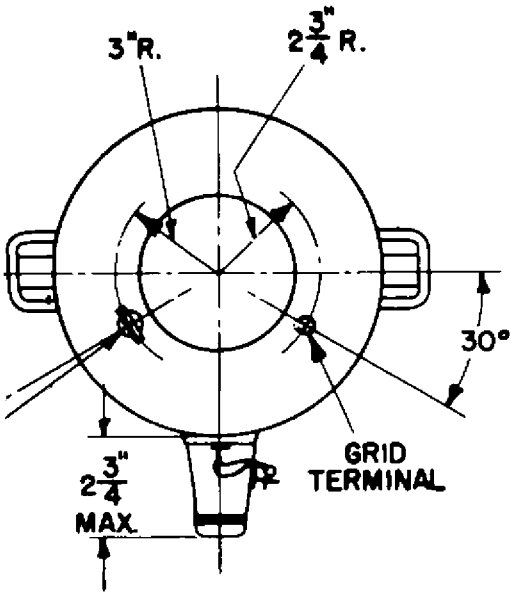

VIEW AT "A"

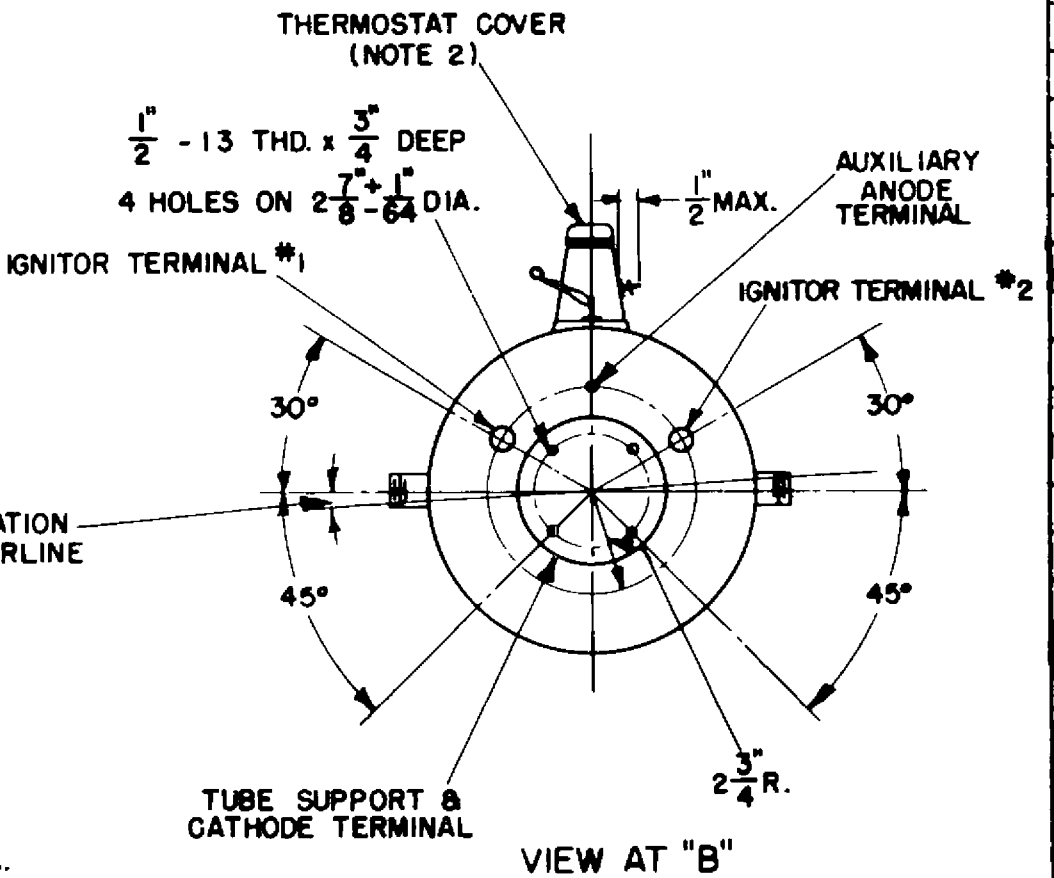

VIEW AT "B"

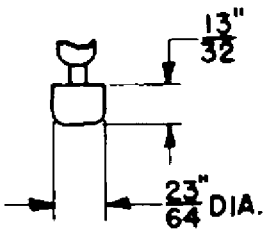

IGNITOR TERMINALS

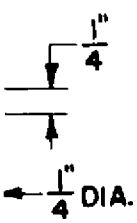

RY ANODE &
ERMINALS

REVISIONS	PRINTS TO	
		7 45
		5 15
		9 1

MADE BY [illegible] Nov. 4-1954
ISSUED Nov. 4. 54 [illegible]

APPROVED JK-18532

ELECT. & TUBE DIV. OR DEPT.
SCH'TDY LOCATION

N22024AZ
CONT ON SHEET SH NO.

VT

DRAWING NO. N220244Z

CONT ON SHEET SH NO.

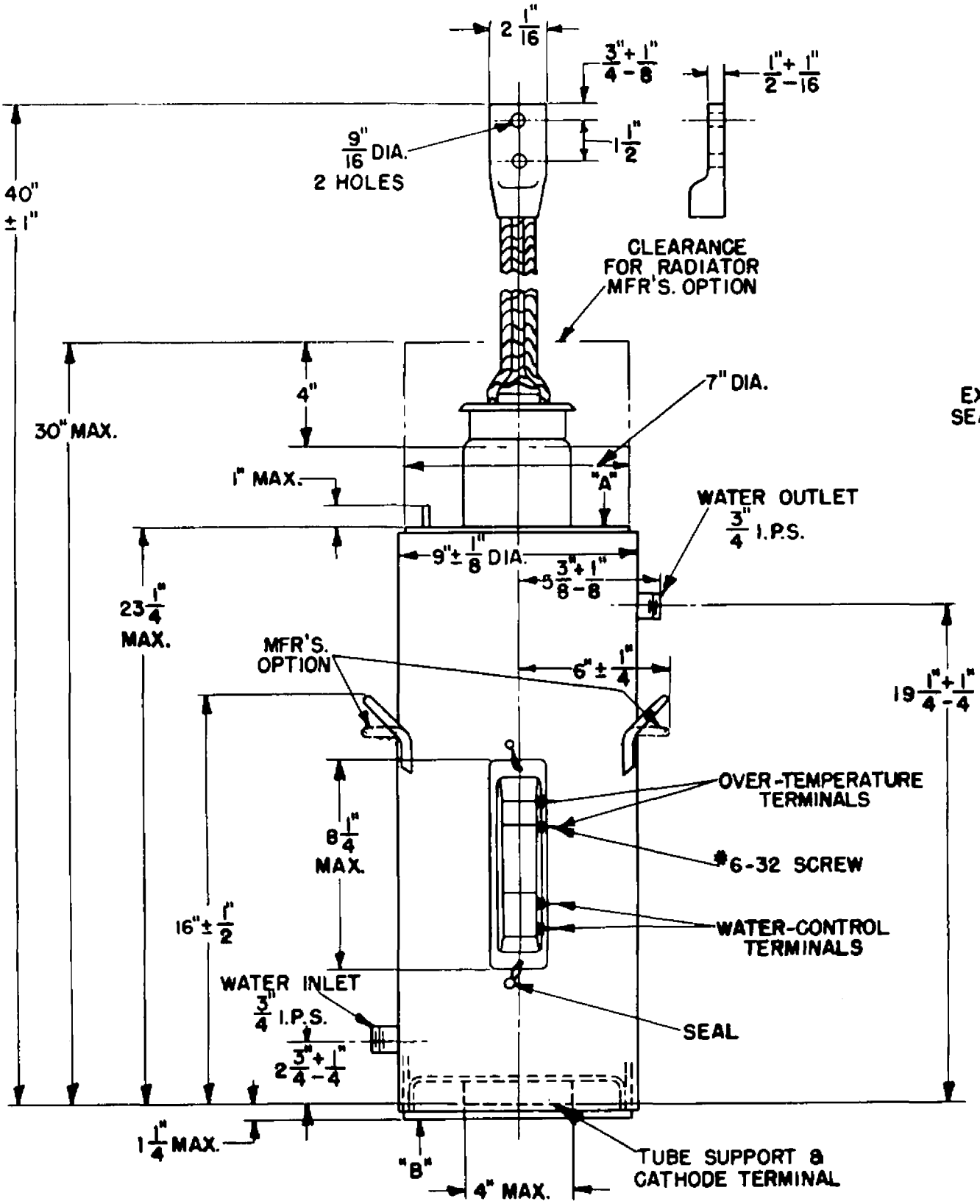

EXHAUST SEAL-OFF

AUXILIAR
GRID T