ADVANCE DATA

MECHANICAL DATA

Base:	B8-32 Octal
Reflector Terminal:	C1-1 Small Cap
Mounting Position:	Any
Waveguide Output:	Mates with UG343/u

GENERAL DATA

Frequency	7125 to 7425 mc
Mechanical Tuning Range	300 mc
Output Power	0.7 to 1.7 w
Electronic Bandwidth	30 to 60 mc
Modulation Sensitivity	275 to 500 kc/volt
Beam Modulation Sensitivity	125 kc/volt
Reflector Voltage	0 to 1000 volts
Tuning (approx.)	650 mc/turn

ELECTRICAL DATA

MAXIMUM RATINGS

Heater Voltage	6.3 volts
Beam Current	80 ma
Reflector Voltage	1000 volts
Beam Voltage	750 volts

TYPICAL OPERATION CONDITIONS

Heater Voltage	6.3 volts
Heater Current	.80 amps
Beam Voltage*	750 volts
Beam Current	70 ma
Reflector Voltage	320 volts
Frequency	7125 to 7425 mc
Power Output (across band) (average)	1.0 watt
Mode	3-3/4
Bandwidth at Half Power Points	34 mc

*Beam Voltage may be reduced with consequent reduction in power - information upon request.

APPLICATION DATA

The Sylvania 6470 is designed as a CW oscillator for use in microwave relay link service or as a local oscillator with long life, good frequency temperature characteristics, controlled output impedance characteristics and convenient tuning arrangements.

QUICK REFERENCE DATA

The Sylvania Type 6470 is an integral cavity, waveguide output, klystron covering the frequency range 7125 to 7425 megacycles.

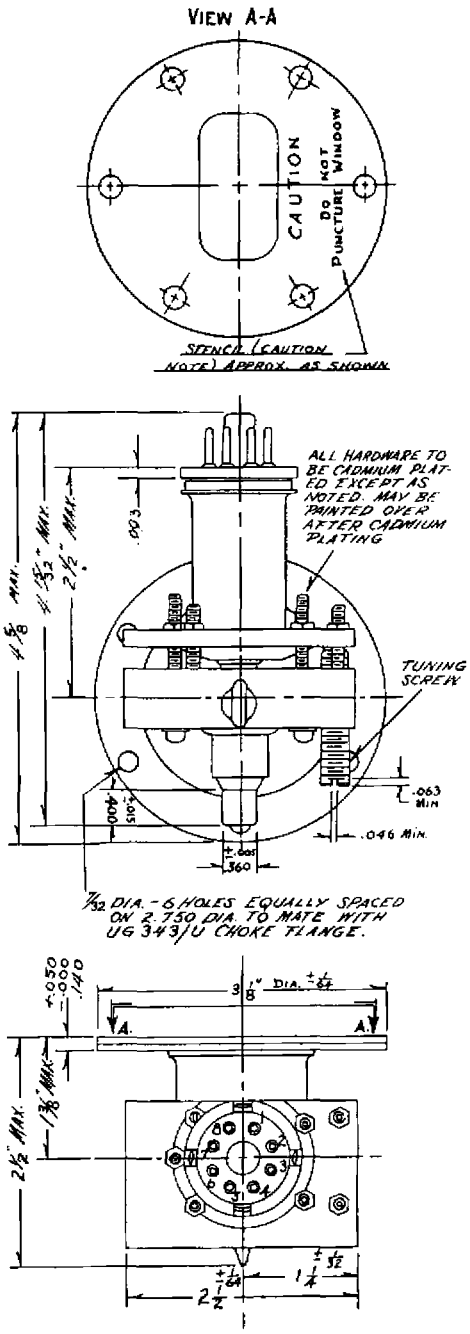

AUGUST 16, 1954

from JETEC release #1357, Sept. 20, 1954