MECHANICAL DATA

Base	Shortened Octal
Cathode	Coated Unipotential
Flanges	UG-344/U
Cooling	Forced Air, 20 CFM
Weight	2 Lbs.
Mounting Position	Any

ELECTRICAL DATA

HEATER CHARACTERISTICS

Heater Voltage (±10%)	6.3 Volts
Heater Current	2.0 Amperes Nom.

DIRECT INTERELECTRODE CAPACITANCES

Gun to Shell	8 $\mu\mu$f Max.

RATINGS (Absolute Values)

Beam Voltage	625 Volts	Max.
Beam Current	150 Ma	Max.
Control Electrode Voltage (with Respect to Cathode)	0 to −50 Volts	Max.
Control Electrode Current	2.0 Ma	Max.
DC Beam Power Input	100 Watts	Max.
Operating Temperature		
Shell	100°C	Max.
Base	75°C	Max.
Tuning Range	5900 to 6450 Mc	Max.

CHARACTERISTICS

Output Resonator Bandwidth	> 25 Mc
Output Resonator VSWR	< 2
Buncher Resonator Bandwidth	> 15 Mc
Buncher Resonator VSWR	< 2
Power Output (Amplifier)	6 to 9 Watts

TYPICAL OPERATION

Resonator Voltage	500	600	Volts dc
Control Electrode Voltage	0	0	
Beam Current	100	130	Ma dc
Amplifier Service			
Input Drive Frequency	6175	6175	Mc
Output Frequency	6175	6175	Mc
R F Power Input	.6	1.0	Watts
R F Power Output	4.0	8.0	Watts
Synchrodyne Operation			
Input Drive Frequency		6175	Mc
Electron Gun Modulation Frequency		115	Mc
Electron Gun Modulation Voltage		55	Volts rms
Synchrodyne Output Frequency		6060 or 6290	Mc
Synchrodyne R F Power Output		1.25	Watts

QUICK REFERENCE DATA

The Sylvania Type 6465 is a 5950 to 6400 Mc klystron amplifier with two built-in cavities. It will provide 6-9 watts output over the specified operating range.

The 6465 was formally designated K-484.

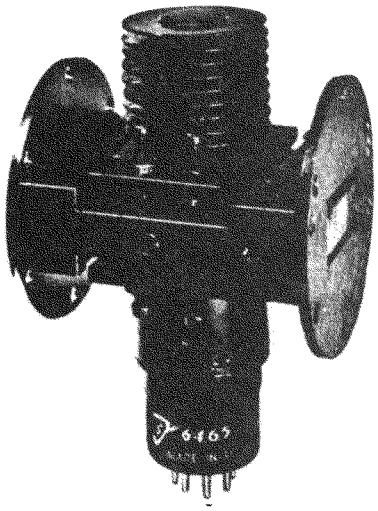

SYLVANIA ELECTRIC PRODUCTS INC.

ELECTRONICS DIVISION
WOBURN, MASS.

Prepared and Released By The TECHNICAL PUBLICATIONS SECTION EMPORIUM, PENNSYLVANIA

4-54-77

APPLICATION DATA

The Type 6465 klystron amplifier is designed for CW service as master oscillator, power amplifier, or synchrodyne mixer in studio television relay link or similar services. It features two independently tuned integral cavities. Usable with lower output outside the specified frequency range.

AVERAGE CHARACTERISTICS

POWER OUTPUT VS BEAM VOLTAGE

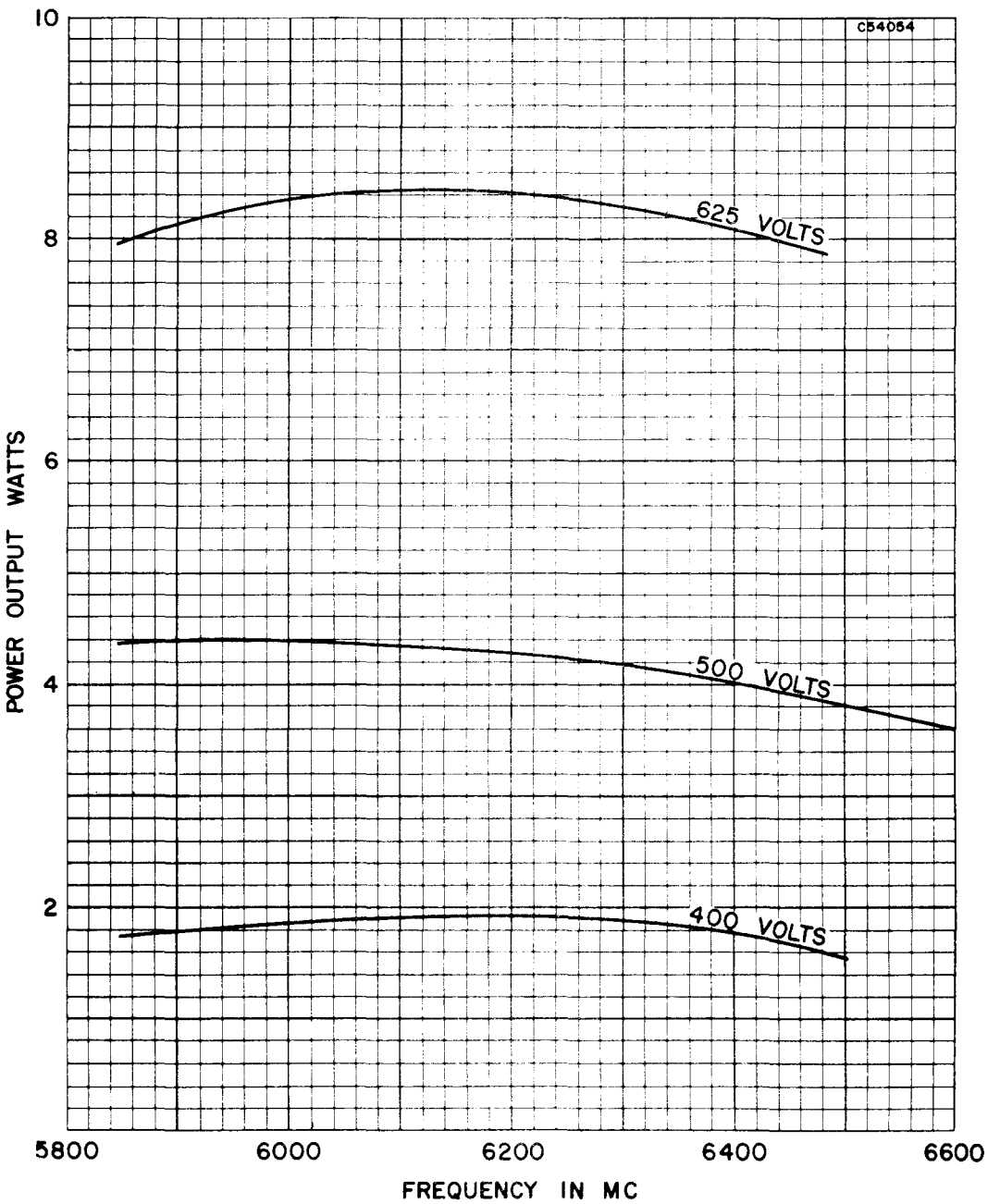

AVERAGE CHARACTERISTICS.

RF OUTPUT POWER VS BEAM VOLTAGE
(AMPLIFIER OPERATION)

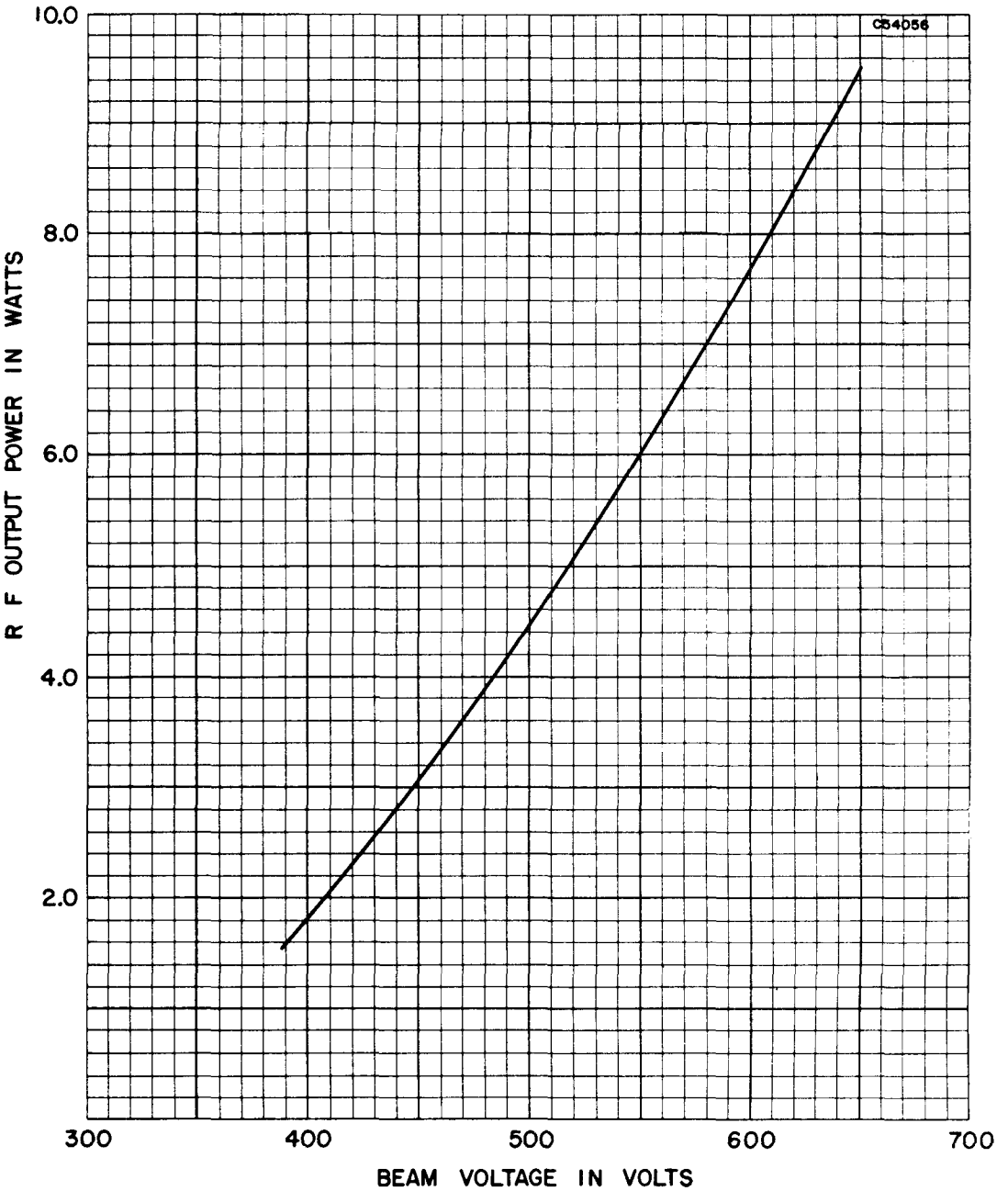

AVERAGE CHARACTERISTICS

RF POWER OUTPUT VS RF POWER INPUT

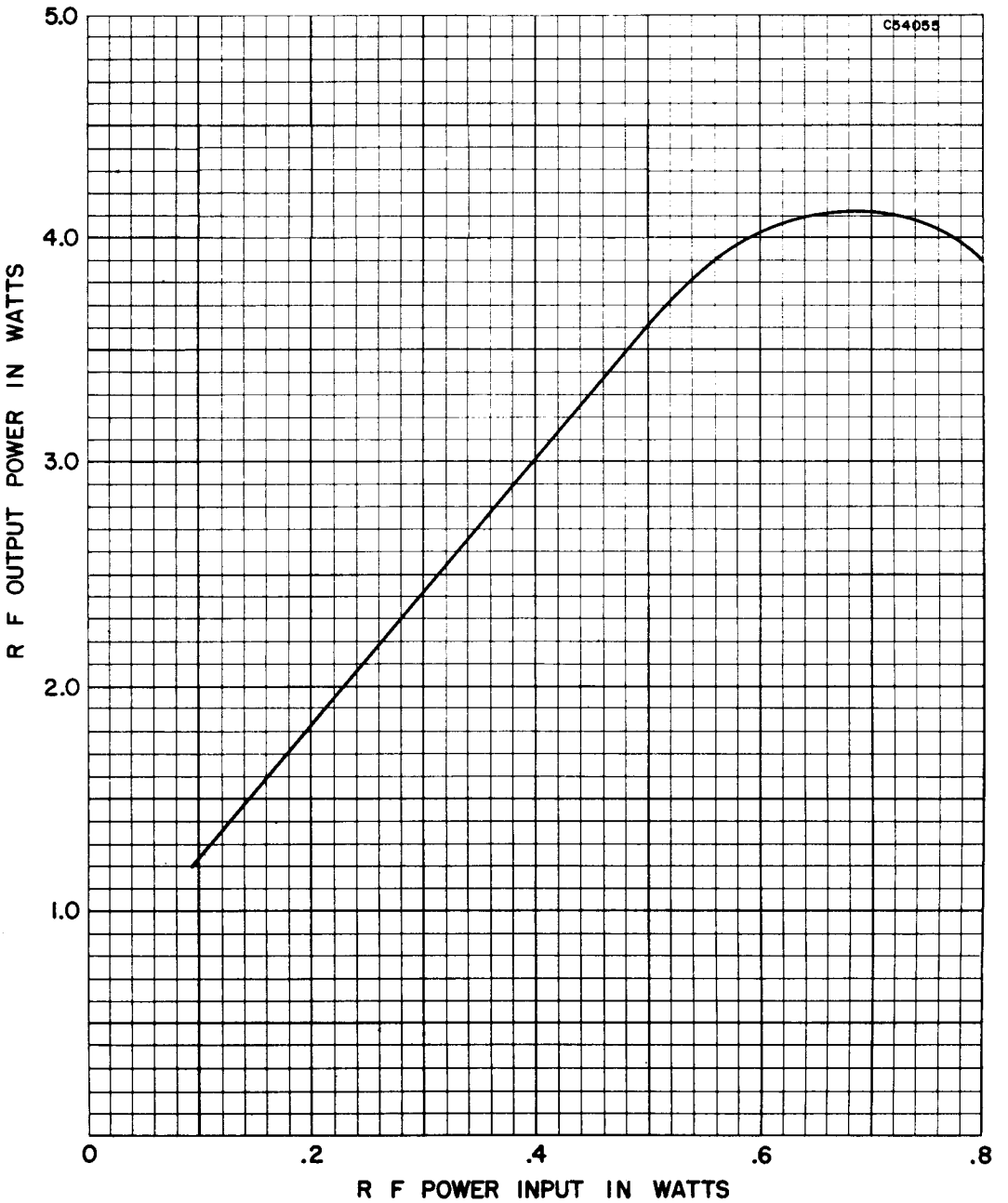

AVERAGE CHARACTERISTICS
POWER OUTPUT VS SYNCRO DRIVE VOLTAGE

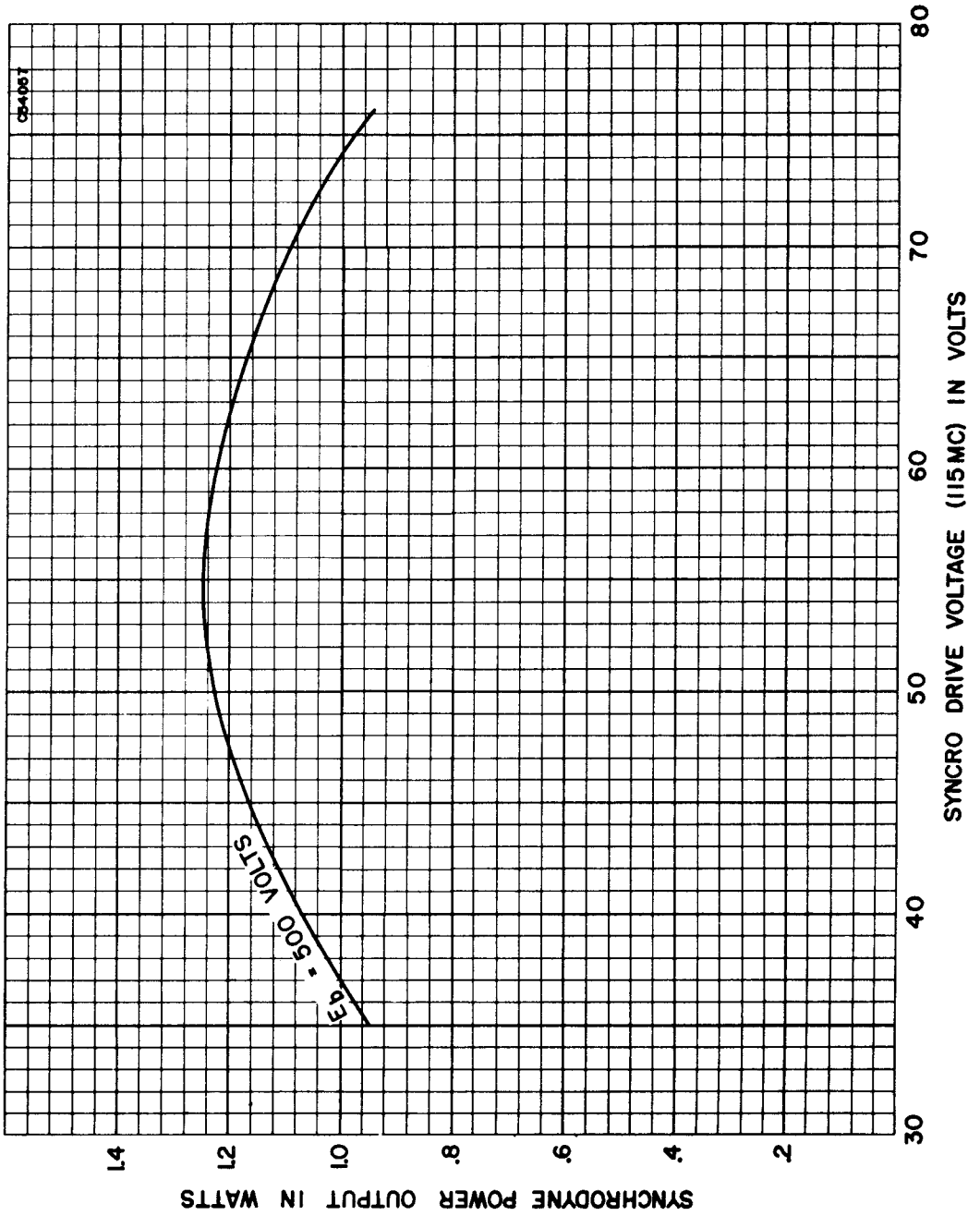

OUTLINE DRAWING

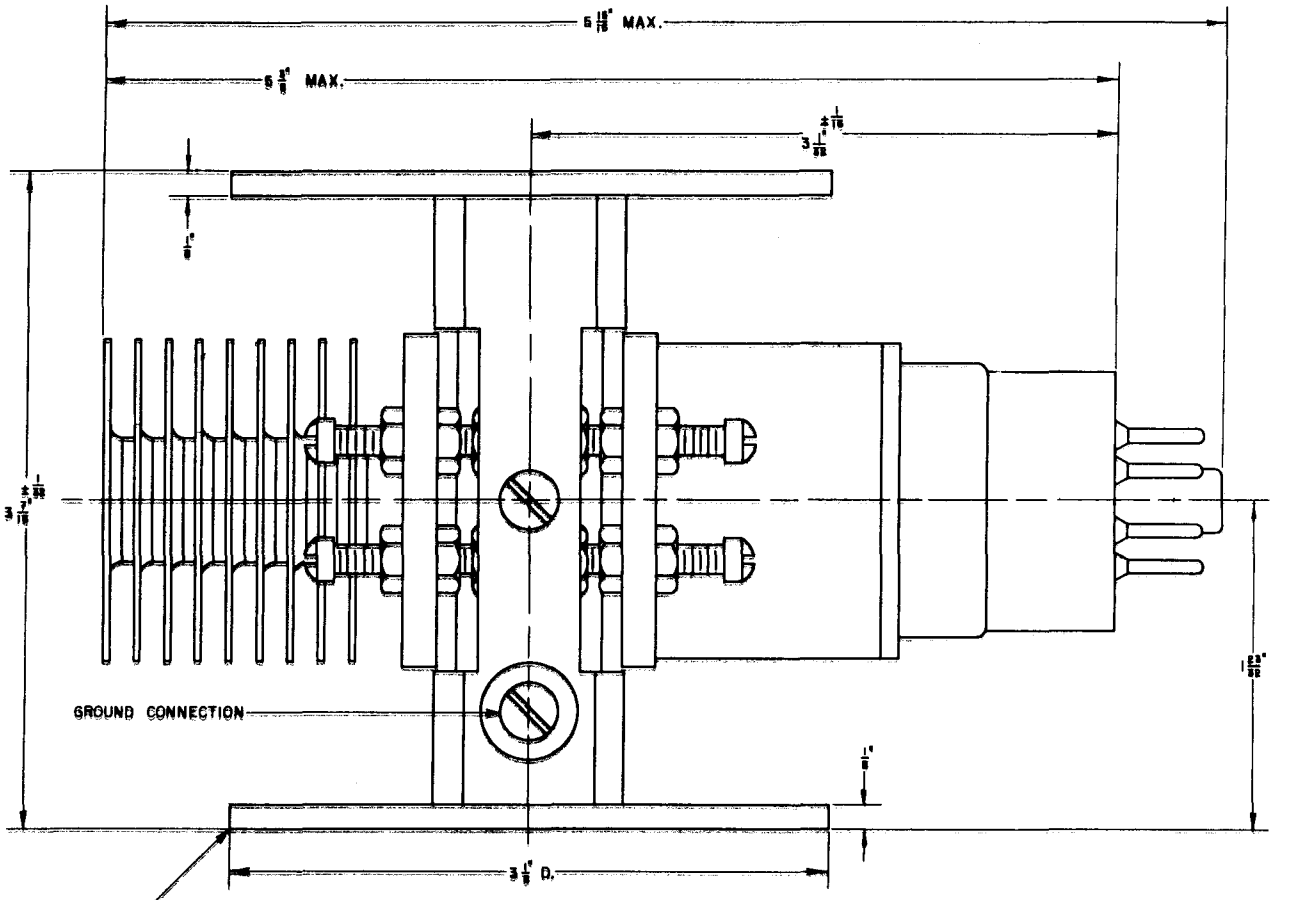

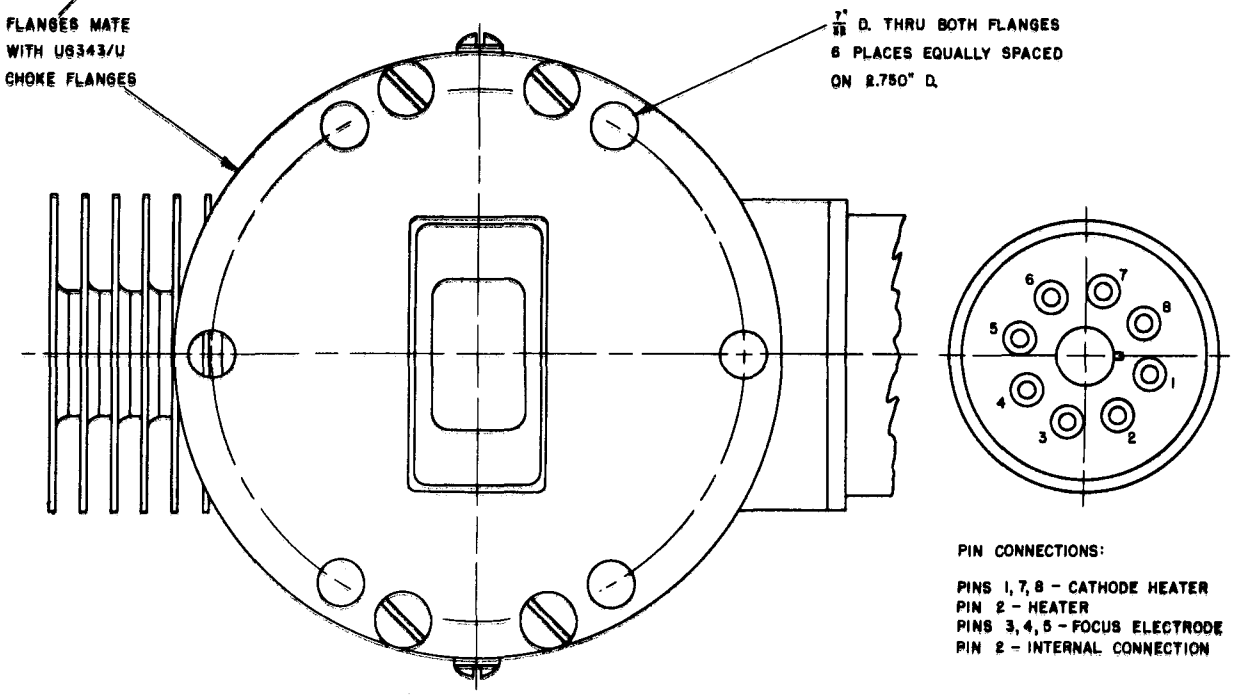

PIN CONNECTIONS:

PINS 1, 7, 8 – CATHODE HEATER
PIN 2 – HEATER
PINS 3, 4, 5 – FOCUS ELECTRODE
PIN 2 – INTERNAL CONNECTION