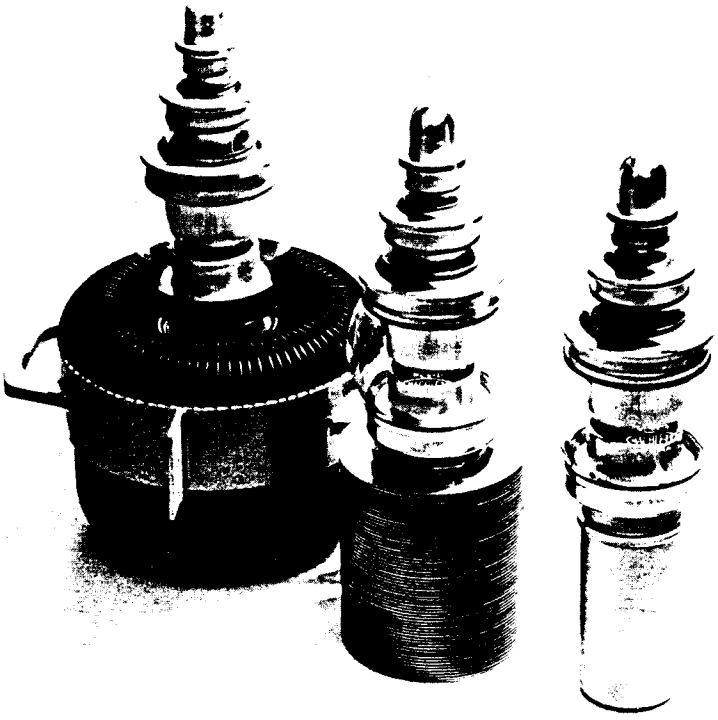

MACHLETT

ML-6420
ML-6421
ML-6421-F

DESCRIPTIONS & RATINGS

DESCRIPTION

The ML-6420 and ML-6421 are general purpose three-electrode tubes designed specifically for 7.5-10 kW industrial heating service and for AM broadcasting. These tubes feature coaxial mounting structures providing high-dissipation, low-inductance r-f electrode terminals. The cathode of each type is a sturdy, self-supporting, stress-free, thoriated-tungsten filament. The ML-6420 has a water-cooled, heavy-wall anode capable of dissipating 12.5 kW with 5 gpm water flow. The ML-6421 has a forced-air-cooled, heavy-wall anode and high-efficiency aluminum disc-fin anode cooler capable of dissipating 10 kW with an air flow of approximately 475 cfm*. Maximum ratings of 10 kVdc plate voltage and 20 kW plate input apply at frequencies up to 30 Mc. These tubes are rated for service up to 70 Mc with plate voltage and plate input reduced according to the table on page 2.

The ML-6421-F includes the features of the ML-6421 except for the conventional copper fin cooler which is mechanically interchangeable with the type 5667. It is rated for 7.5 kW dissipation with an air flow of approximately 550 cfm.

GENERAL CHARACTERISTICS

Electrical

	ML-6420 ML-6421	ML-6421-F
Filament Voltage		7.0 Volts
Filament Current		85 Amps
Filament Starting Current, maximum		400 Amps
Filament Cold Resistance		0.0095 Ohms
Amplification Factor		20
Interelectrode Capacitances:		
Grid-Plate	20	21 uuf
Grid-Filament	30	30 uuf
Plate-Filament	1.8	2.1 uuf

Mechanical

Mounting Position	Vertical, anode down
Type of Cooling — ML-6420	Water and forced-air†
Water flow on anode, minimum for 12.5 kW dissipation	5 gpm
Maximum outgoing water temperature	70 C
Type of Cooling — ML-6421, ML-6421-F	Forced-air
Air flow on anode	
ML-6421*, minimum for 10 kW dissipation	Pressure: 475 cfm at 3.5" water Exhaust: 550 cfm at 3.5" water
ML-6421-F, minimum for 7.5 kW dissipation	550 cfm
Maximum incoming air temperature	50 °C
Maximum Glass Temperature	165 °C†
Net Weight, approximately	
ML-6420	8 lbs.
ML-6421	11.5 lbs.
ML-6421-F	30 lbs.

*When used with Machlett ML-6421 Air Distributor, F-17796.

†At frequencies up to 15 Mc, normal cabinet ventilation should be sufficient to cool glass portions of tube. At higher frequencies or high ambient temperatures, auxiliary air flow of 25-50 cfm may be required and should be distributed to maintain uniform glass temperature, not greater than 165°C, around the circumference of the seals.

MAXIMUM RATINGS AND TYPICAL OPERATING CONDITIONS

(Continuous Commercial Service)

VALUES APPLY TO ALL THREE TYPES UNLESS OTHERWISE SPECIFIED

Audio-Frequency Power Amplifier and Modulator Class B

Maximum Ratings, Absolute Values

D-C Plate Voltage	10000 volts
Max.-Signal D-C Plate Current*	2.2 amps
Max.-Signal Plate Input*	20 kW
Plate Dissipation*	
ML-6420	12.5 kW
ML-6421	10.0 kW
ML-6421-F	7.5 kW

Typical Operation (Values are for two tubes)

D-C Plate Voltage	4500	9000 volts
D-C Grid Voltage	−220	−400 volts
Peak A-F Grid-to-Grid Voltage	1500	1750 volts
Peak A-F Plate-to-Plate Voltage	6600	15600 volts
Zero-Signal D-C Plate Current	0.05	0.4 amp
Max.-Signal D-C Plate Current	4.0	3.7 amps
Effective Load Resistance, Plate-to-Plate	2000	5400 ohms
Max.-Signal Driving Power, approximate	290	210 watts
Max.-Signal Power Output, approximate	10.8	23 kW

*Averaged over any audio-frequency cycle of sine-wave form.

Radio-Frequency Power Amplifier Class B

Carrier conditions per tube for use with a maximum modulation factor of 1.0

Maximum Ratings, Absolute Values

D-C Plate Voltage	10000 volts
D-C Plate Current	1.8 amps
Plate Input	
ML-6420	18 kW
ML-6421	15 kW
ML-6421-F	11 kW
Plate Dissipation	
ML-6420	12.5 kW
ML-6421	10.0 kW
ML-6421-F	7.5 kW

Typical Operation

D-C Plate Voltage	9000 volts
D-C Grid Voltage	−390 volts
Peak R-F Grid Voltage	445 volts
Peak R-F Plate Voltage	3800 volts
D-C Plate Current	1.0 amp
D-C Grid Current	0 mA
R-F Load Resistance	2400 ohms
Driving Power, approximate§	100 watts
Power Output, approximate	3.0 kW

§At crest of audio-frequency cycle with modulation factor of 1.0.

Plate-Modulated R-F Power Amplifier Class C Telephony

Carrier conditions per tube for use with a maximum modulation factor of 1.0

Maximum Ratings, Absolute Values

D-C Plate Voltage	8000 volts
D-C Grid Voltage	−1600 volts
D-C Plate Current	1.8 amps
D-C Grid Current	0.40 amp
Plate Input	12 kW
Plate Dissipation	
ML-6420	8.3 kW
ML-6421	6.7 kW
ML-6421-F	5.0 kW

Typical Operation

D-C Plate Voltage	6000 volts
D-C Grid Voltage	−800 volts
Peak R-F Grid Voltage	1320 volts
Peak R-F Plate Voltage	5200 volts
D-C Plate Current	1.25 amps
D-C Grid Current	0.21 amp
R-F Load Resistance	2300 ohms
Driving Power, approximate	270 watts
Power Output, approximate	5.9 kW

R-F Power Amplifier and Oscillator Class C Telegraphy

Key-down conditions per tube without amplitude modulation†

Maximum Ratings, Absolute Values

D-C Plate Voltage	10000 volts
D-C Grid Voltage	−1600 volts
D-C Plate Current	2.2 amps
D-C Grid Current	0.42 amp
Plate Input	20 kW
Plate Dissipation	
ML-6420	12.5 kW
ML-6421	10.0 kW
ML-6421-F	7.5 kW

Typical Operation

D-C Plate Voltage	8000	8000	9000 volts
D-C Grid Voltage	−700	−700	−750 volts
Peak R-F Grid Voltage	1080	1330	1350 volts
Peak R-F Plate Voltage	7000	6500	7600 volts
D-C Plate Current	1.0	2.15	2.0 amps
D-C Grid Current	0.08	0.20	0.18 amp
R-F Load Resistance	4000	1700	2200 ohms
Driving Power, approximate	100	260	240 watts
Power Output, approximate	6.1	12.3	13.2 kW

†Modulation essentially negative may be used if the positive peak of the envelope does not exceed 115% of the carrier conditions.

CHARACTERISTIC RANGE VALUES FOR EQUIPMENT DESIGN

Characteristics	Conditions		Limits Minimum	Limits Bogey	Limits Maximum
Grid Voltage	e_b = 1300 volts; i_b = 9.0 amps	e_c:	——	——	850 volts
Grid Current	e_b = 1300 volts; i_b = 9.0 amps	i_c:	——	——	3.0 amps
Plate Voltage	E_c = 0 Vdc; I_b = 1.0 Adc	E_b:	2.5	2.9	3.3 kVdc
Plate Voltage	E_c = −200 Vdc; I_b = 1.0 Adc	E_b:	6.2	6.9	7.6 kVdc
Grid Voltage	E_b = 10.0 kVdc; I_b = 0.02 Adc	E_c:	−470	−540	−610 Vdc
Plate Power Output	E_b = 9.0 kVdc; E_c = −750 Vdc; I_b = 2.0 Adc; I_c = 0.18 Adc	P_o:	11	——	—— kW

MAXIMUM FREQUENCY RATINGS

Maximum ratings apply up to 30 Mc except as noted. The tube may be operated at higher frequencies provided the maximum values of plate voltage and power input are reduced according to the tabulation on the right (other maximum ratings are the same as shown above). Special attention should be given to adequate ventilation of the bulb at the higher frequencies.

Frequency	30	50	70 Mc
Percent Maximum Rated Plate Voltage and Plate Input			
Class B	100	90	70
Class C	100	75	60

ML-6420

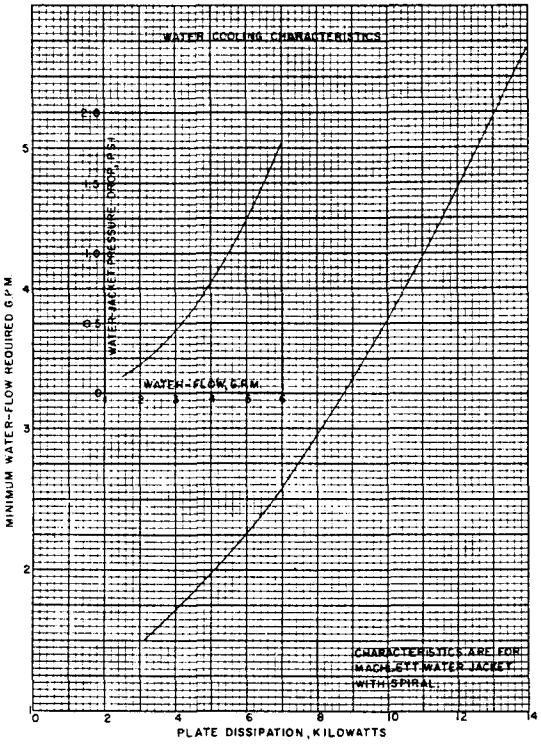

A-8654

ML-6421

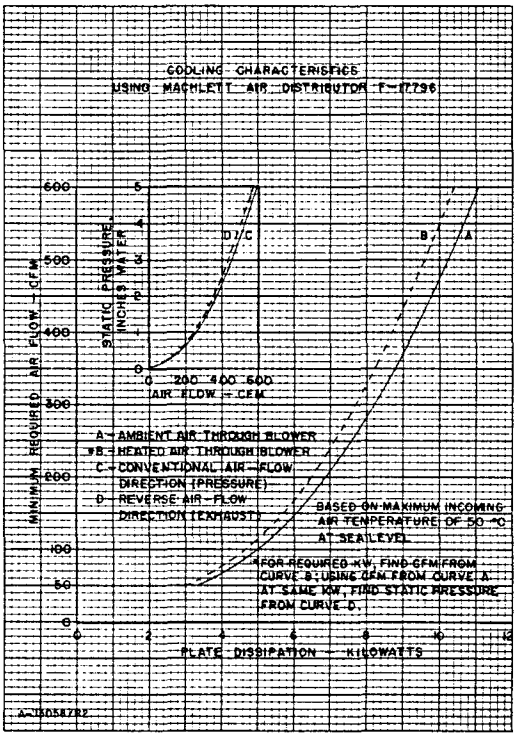

ML-6421-F

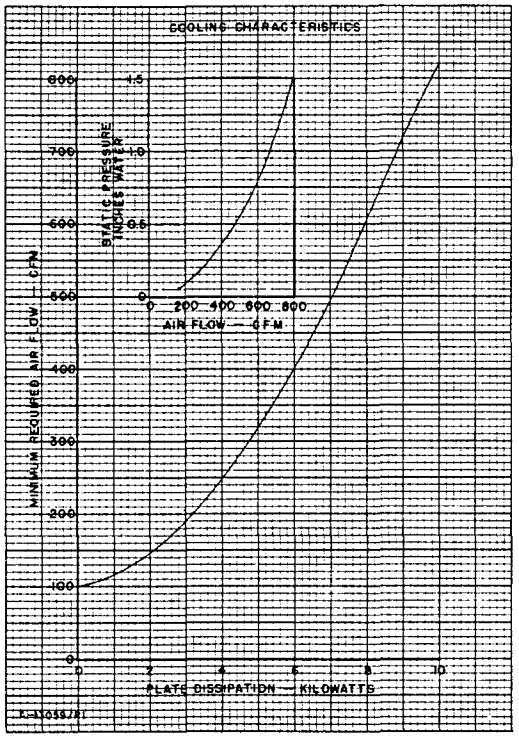

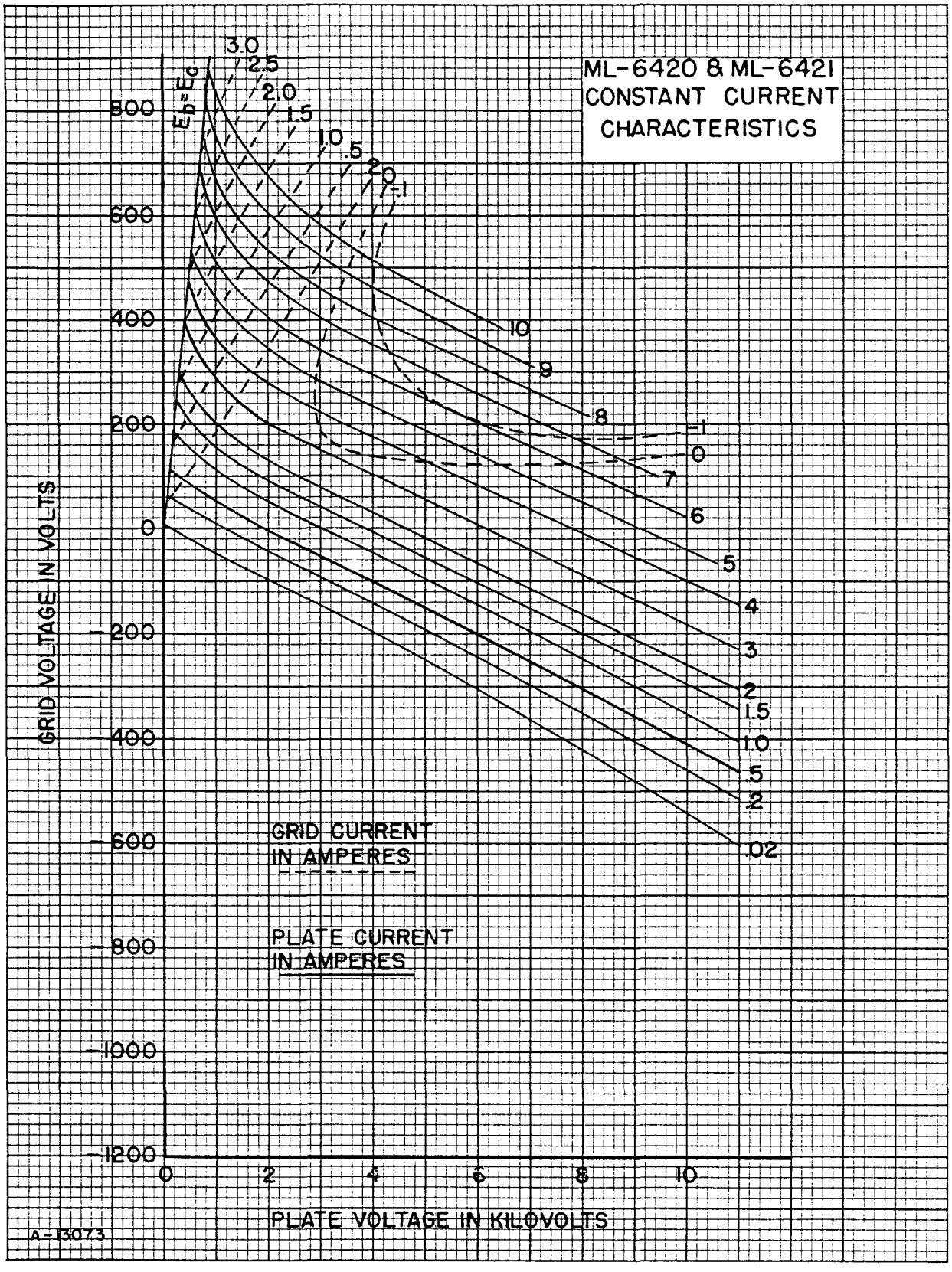
ML-6420 & ML-6421
CONSTANT CURRENT
CHARACTERISTICS
$E_b = E_c$
3.0
2.5
2.0
1.5
1.0
.5
.2
0
-1
10
9
8
7
6
5
4
3
2
1.5
1.0
.5
.2
.02
-1
0
GRID CURRENT
IN AMPERES
PLATE CURRENT
IN AMPERES
GRID VOLTAGE IN VOLTS
800
600
400
200
0
-200
-400
-600
-800
-1000
-1200
0
2
4
6
8
10
PLATE VOLTAGE IN KILOVOLTS
A-13073

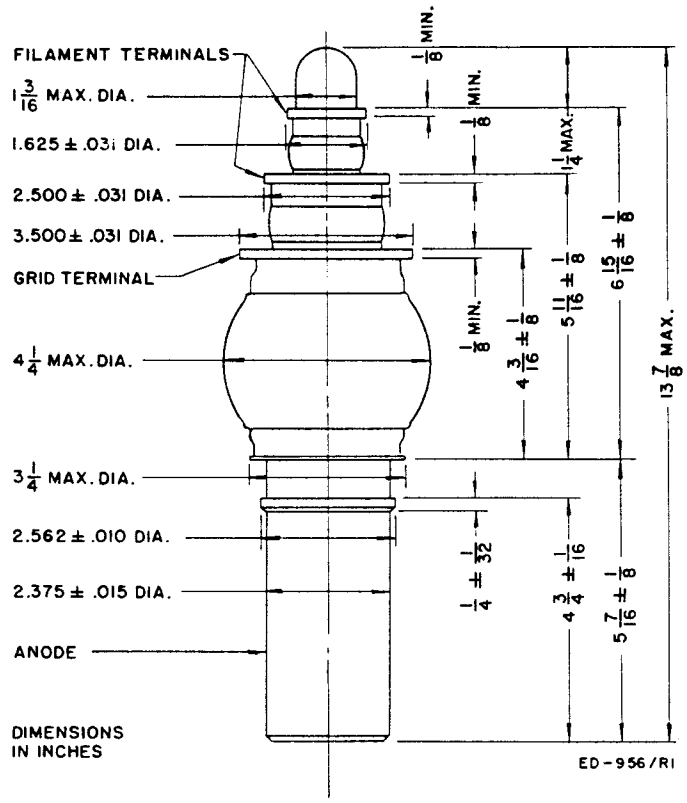

DIMENSIONS — ML-6420

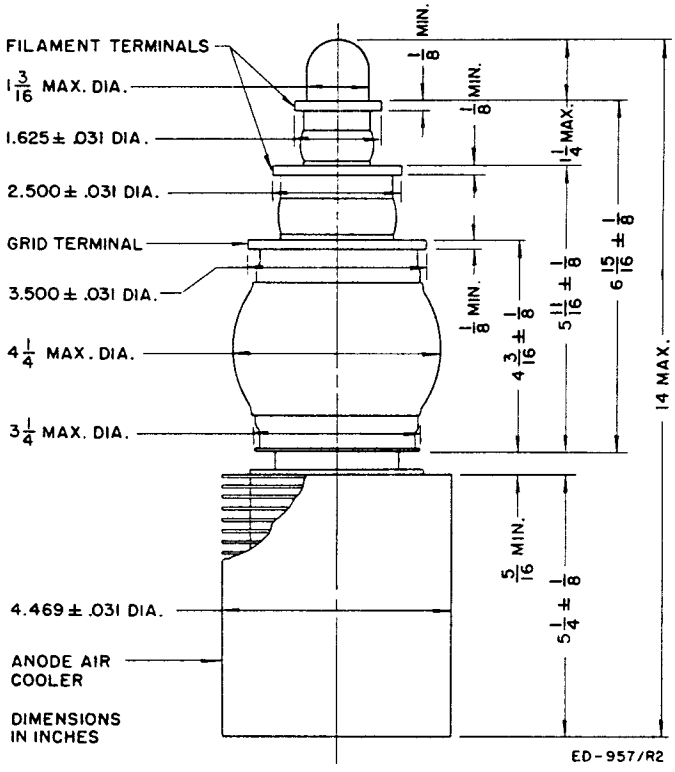

DIMENSIONS — ML-6421

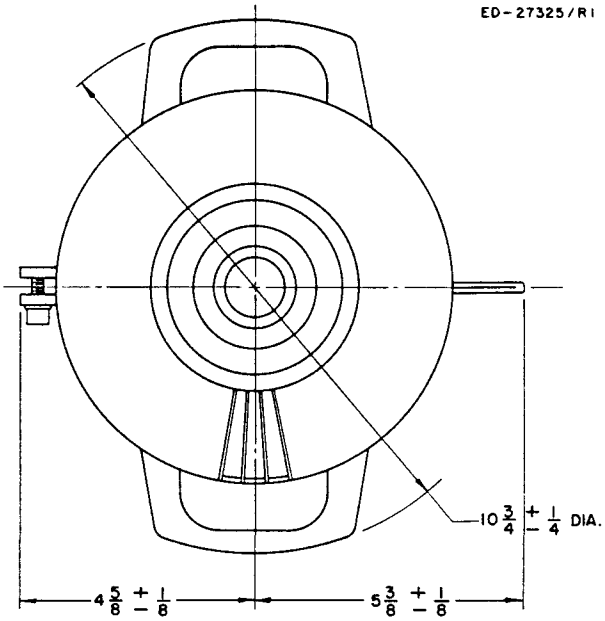

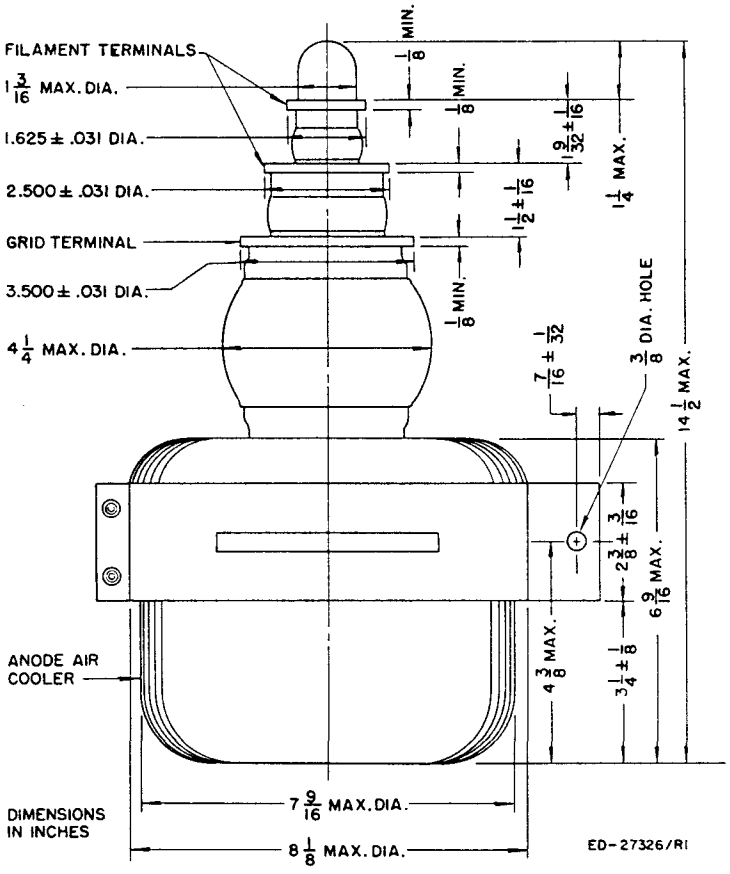

DIMENSIONS — ML-6421-F

THE MACHLETT LABORATORIES, INC.

An Affiliate of Raytheon Company

SPRINGDALE MACHLETT CONNECTICUT

U. S. A.