# 6411/IC-16-3
# IMAGE CONVERTER TUBE
## (Enlarged View)

The 6411/IC-16-3 Image Converter Tube has a cathode with sensitivity in the near-infrared portion of the spectrum. Utilizing its ability to make visual an infrared image, its many uses include the inspection of photographic film, the determining of temperature distribution in heated objects, medical and biological research, criminal investigations, high speed photography and in various military operations.

The 6411/IC-16-3 was developed by the Special Purpose Tube Laboratory of the Farnsworth Division of International Telephone and Telegraph Corporation. This laboratory, now a part of ITT Laboratories Division, develops products for manufacture by the Components Division of ITT.

# 6411/IC-16-3 ELECTRICAL CHARACTERISTICS

| | *Lower Allowable Limit* | *Typical* | *Upper Allowable Limit* | |
|---|---|---|---|---|
| **Electrical Characteristics:** | | | | |
| Cathode to anode voltage (1) | | 16 | 16.5 | kv |
| Focus voltage (percentage of anode voltage) (4) | 13 | 14.5 | 16 | percent |
| Cathode current (3) | | | 2 | μa |
| Maximum dark current to any electrode | | | 0.1 | μa |
| **General Characteristics:** | | | | |
| Average cathode current density | | | 0.4 | $\mu a/cm^2$ |
| Cathode luminous sensitivity (5) (8) | 12 | 25 | | μa/lumen |
| Cathode radiant sensitivity at 8000 Å | 0.0012 | 0.0025 | | μa/μ watt |
| Phosphor screen luminous efficiency at 16 kv | 30 | 55 | | lumen/watt |
| Infrared conversion index at 16 kv | 10 | | | |
| Image magnification (paraxial) | 0.66 | 0.68 | 0.70 | |
| Radial image distortion at 9.2 mm from center of cathode | | 9.3 | | percent |
| Resolving power (paraxial) (6) | | 20 | | line pairs/mm |
| Resolving power at 9.2 mm from center of cathode (6) | | 5 | | line pairs/mm |
| Mean background screen brightness (7) | | 1.5 | | μ lambert |
| Useful cathode diameter | | 0.970 | | inch |
| Useful phosphor screen diameter | | 0.750 | | inch |
| Cathode surface | S1 (see characteristic curve) | | | |
| Phosphor screen | P20 (aluminized) (see characteristic curve) | | | |

(1) The upper allowable working voltage is specified on the basis of a suitable margin of safety regarding internal glow or flashover. Such glow or flashover invariably causes loss in stability or cathode sensitivity.

(2) Current to the focus electrode is sufficiently small so that it may be disregarded in the design of a voltage divider for electrical focusing.

(3) Averaged over an interval of not greater than 30 seconds.

(4) Approximate voltage required for correct focus.

(5) At 100 volts dc applied between cathode and all other electrodes connected together.

(6) Adjust voltage for equal horizontal and vertical resolution on the axis of symmetry.

(7) Cathode not illuminated; temperature 25 degrees C maximum.

(8) With standard tungsten light source (2870 degrees K color temperature).

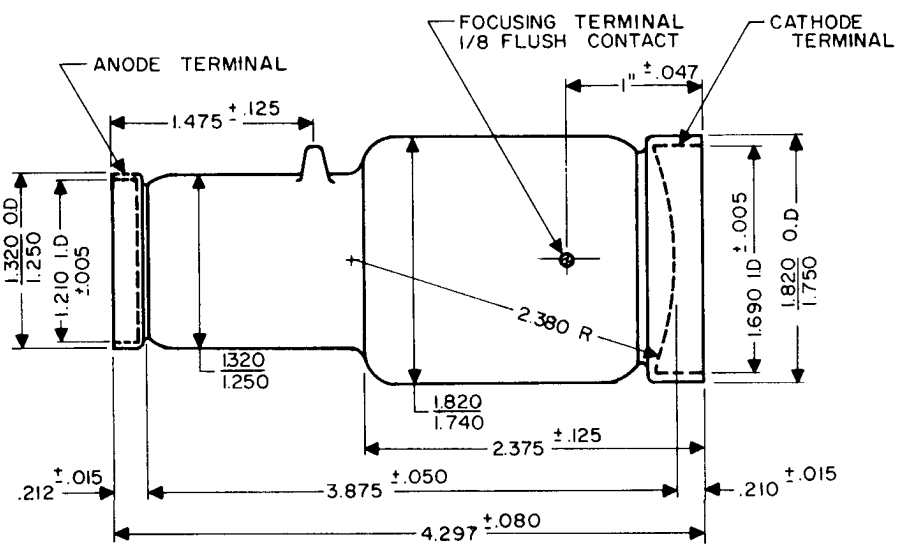


Figure 1: Outline Dimensional Drawing

# GENERAL INFORMATION

1. The IC-16-3 normally is used in conjunction with an objective lens and magnifying eyepiece. The inverted image on the cathode is reinverted by the electron optics of the tube so that the image as it appears on the screen or is seen through the eyepiece is erect. The objective may be either refractive or reflective (Schmidt), and should be designed with proper consideration given to the spherical cathode surface. Usually a field flattener lens is used in conjunction with the objective. The eyepiece should be a good quality achromat with a field slightly in excess of the useful phosphor screen area (0.750 inch diameter). A 7-power Hastings triplet will be found reasonably satisfactory for most applications.

2. For the majority of viewing applications, a filtered tungsten lamp is used for irradiating the subject. The visible component is suitably suppressed with one of the readily available filters or with several in combination. (Wratten 87C, 88A, Corning 2540, and others.)

3. It is recommended that the precise internal dimensions of the cathode and anode terminals, indicated in the outline drawing, be used in the tube mounting. This will aid in maintaining alignment of the tube with respect to the optical system when servicing. The glass "tip-off" point is used as an index for location of the focusing terminal.

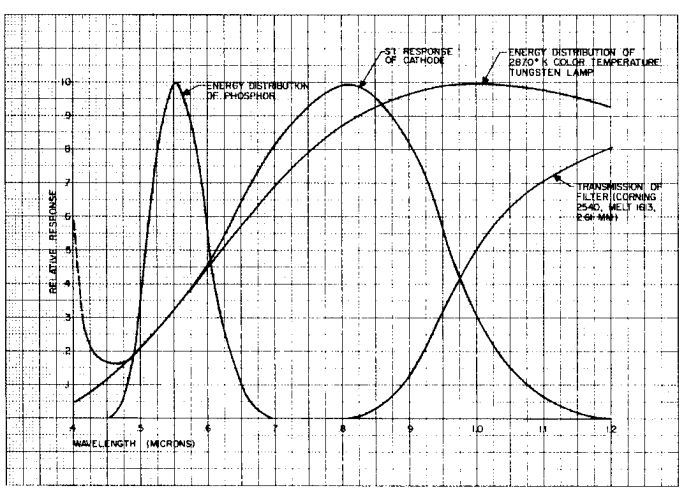


Figure 2: Relative Response Versus Wavelength

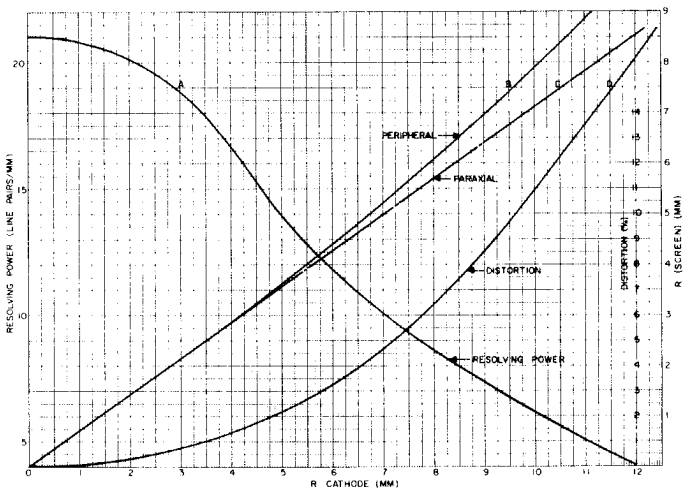


Figure 3: Characteristic Curves

4. In order to prevent the deleterious effect of corona and surface leakage, it is recommended that the IC-16-3 always be operated in a dry atmosphere. This is best realized by enclosing the tube in a reasonably air-tight jacket or envelope provided with a suitable dessicant, such as silica-gel. Coating the envelope with a very thin film of Silicone 400 to prevent condensation of moisture in a continuous film will be found advantageous as an alternative.

5. Consideration should also be given to necessary safety measures associated with operation of high voltage equipment. It is advisable that the tube be housed in a grounded metal envelope. The voltage lead to the tube should be a small coaxial cable; the external conductor in the cable is grounded to both tube housing and power supply. It will be found advantageous in most applications to include the voltage divider within the grounded metal tube housing.

6. While the tube is normally operated with the cathode at ground potential, this is not necessarily a requirement.

# DEFINITIONS PERTAINING TO IMAGE CONVERTER TUBES

## Luminous efficiency:

The quotient of the total luminous output divided by the electrical power input. Since this is a function of phosphor screen voltage, this voltage must be specified.

## Radiant efficiency:

The quotient of the total radiant output divided by the electrical power input over a specified operating voltage range.

## Infrared conversion index:

The quotient of the exit luminous flux divided by the luminous equivalent of the incident infrared flux. The incident infrared flux is that originating from a tungsten lamp with a lead or lime glass lamp envelope (coiled or coiled-coil tungsten filament) operated at a color temperature of 2870 degrees K and transmitted by a 2540 Corning filter (melt 1613, thickness 2.61 mm). Non-filtered light on the cathode must not exceed 0.1 lumen. Luminous equivalent is defined as the product of the luminous flux and the transmission factor as determined with a 2870 degree K tungsten source and a receiver with standard S1 response.

$$\text{Infrared conversion index (c.i.)} = \frac{F_e}{F_i\ T}$$

where $F_e$ = total luminous flux from phosphor screen
$F_i$ = luminous flux incident on filter
$T$ = transmission factor of filter

$$T = \frac{\int_0^\infty J_\lambda T_\lambda R_\lambda d_\lambda}{\int_0^\infty J_\lambda R_\lambda d_\lambda}$$

$J_\lambda$ = Power output of the standard lamp at wavelength per unit wavelength interval

$T_\lambda$ = Transmission of filter at wavelength

$R_\lambda$ = Spectral response at wavelength

## Distortion:

The percentage departure of the radial distance of an actual point on the screen from the radial distance of the corresponding point of the object on the cathode multiplied by the paraxial magnification. For example, (see figure 3), an illuminated point 7 mm from the center of the cathode would theoretically be reproduced as a point 5.0 mm from the center of the screen, however, because of the 4-1/2 percent distortion at this distance from the center of the cathode (see curve D), the actual point will appear 5.2 mm from the center of the screen. The magnification at any point on curve B is the slope of the curve at that point.

## Resolving power:

The number of equally spaced parallel opaque lines per unit length (with spacing equal to the width of the lines) at the cathode which may be observed in the resulting screen image. (See curve A, figure 3).

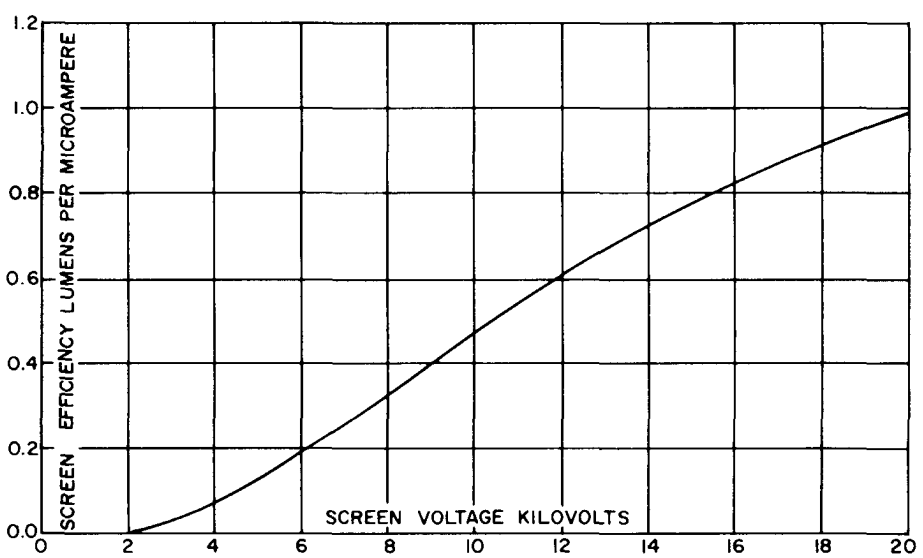


Figure 4: Screen Voltage Versus Screen Efficiency

**Address technical inquiries to: Director, Components & Instrumentation Laboratory, ITT Laboratories, 3702 E. Pontiac Street, Fort Wayne, Ind.**

FORM ITTL 6411 1M 8-58

ITT LABORATORIES
FORT WAYNE, INDIANA

# INFRARED IMAGE CONVERTER TUBE
## TYPE 6411

### A PRODUCT OF ITT LABORATORIES

Nutley, N. J. • Fort Wayne, Ind. • Chicago, Ill. • San Fernando and Palo Alto, Calif.

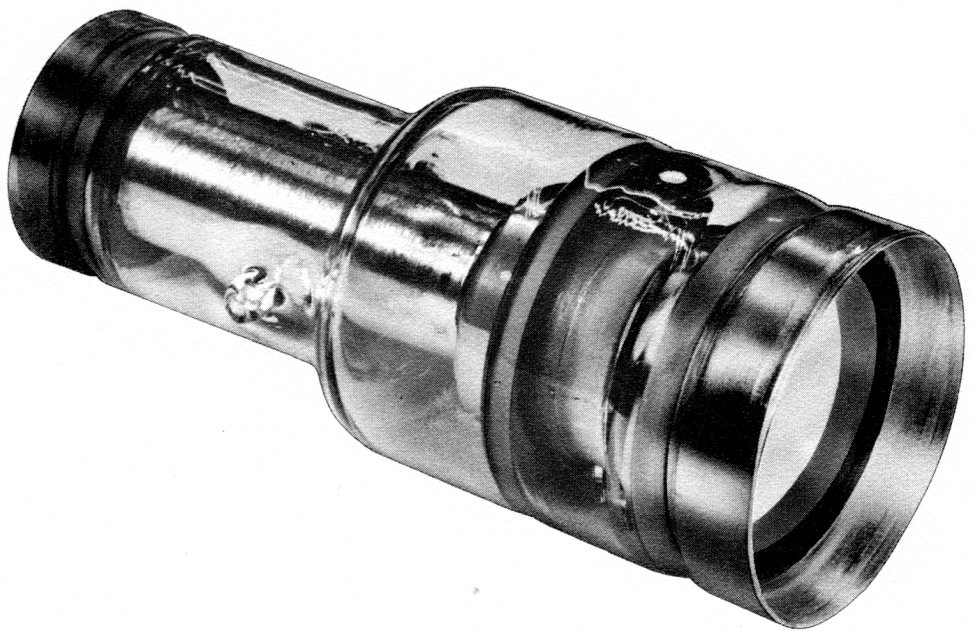

The 6411 Image Converter Tube changes infrared radiation to a visible image.

The 6411 Image Converter Tube has a cathode sensitivity in the near-infrared portion of the spectrum. It can be used in any application where it is necessary or desirable to "see in the dark". Its many uses include the inspection of photographic film, the determination of temperature distribution in heated objects, medical and biological research, criminal investigations, high speed photography, and in various military operations. The Image Converter Tube is used with an objective lens and magnifying eyepiece. An inverted image on the cathode is reinverted by the electron optics of the tube so that the image as it appears on a screen or seen through an eyepiece is correct. For the majority of viewing applications a filtered tungsten lamp is used for irradiating the subject.

**For further information and detailed technical specifications write to the Director, Components and Instrumentation Laboratory, ITT Laboratories, 3702 E. Pontiac St., Fort Wayne, Indiana.**

A DIVISION OF INTERNATIONAL TELEPHONE AND TELEGRAPH CORPORATION