CENTRAL ELECTRONIC

MANUFACTURERS

DENVILLE, NEW JERSEY

POWER TRIODE TYPE **6367** PLATE DISSIPATION —3KW

POWER TRIODE

DESCRIPTION

The Nucor tube type 6367 is a forced-air-cooled general purpose, three electrode tube, specifically designed for industrial and communication applications. The anode is capable of dissipating 3 kilowatts. It features a sturdily-supported, double-spiral thoriated tungsten filament. Rugged kovar grid and filament seals, insures greater protection against mechanical stress and shock. The wide spacing between elements and the high efficiency, low pressure radiator are additional features of this tube. Flexible leads constructed of O.F.H.C. copper can be modified to individual customer requirements.

Full input ratings apply to 30 mc. Reduced ratings, as indicated, are applicable for useful power outputs extending to 50 mc.

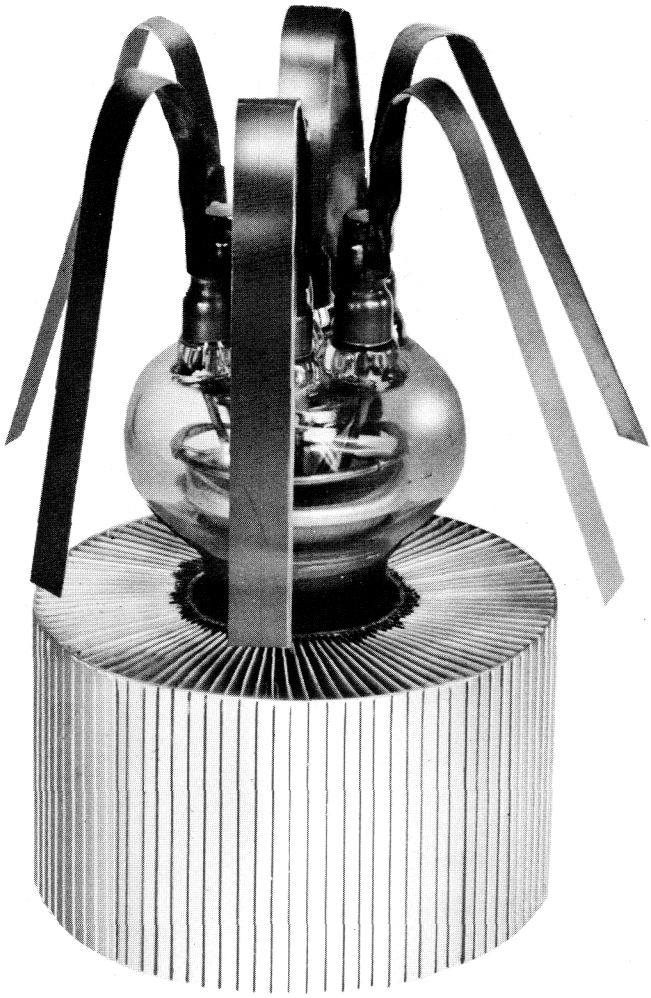

SPECIFICATIONS

ELECTRICAL:

Filament Voltage ..... 13.0 Volts
Filament Current ..... 36 Amperes
Amplification Factor,
$E_c = -200V$, $I_b = 0.2A$ 25

Interelectrode Capacitances
Grid-Plate ..... 14.7 $\mu\mu f$
Grid-Filament ..... 14.5 $\mu\mu f$
Plate-Filament ..... 1.7 $\mu\mu f$

PHYSICAL:

Mounting Position — Vertical

Type of Cooling — Forced-Air
Maximum Incoming Air Temperature ..... 45°C

Required Air Flow on Anode

Plate Dissipation (Kilowatts) ..	3	2.4	1.8
Air Flow — Cubic Feet Per Min.	190	125	75
Pressure — Inches Water	1.21	0.58	0.26
Maximum Glass Temperature ..			150°C

Net Weight Approximate ..... 4¼ Pounds

DIVISION OF NUCLEAR CORPORATION OF AMERICA

MAXIMUM RATINGS AND TYPICAL OPERATING CONDITIONS

AUDIO-FREQUENCY POWER AMPLIFIER AND MODULATOR -- CLASS B

MAXIMUM RATINGS, ABSOLUTE VALUES

DC Plate Voltage	6,200 Volts
Maximum Signal DC Plate Current*	2.0 Amperes
Maximum Signal Plate Input*	6.0 Kilowatts
Plate Dissipation*	3 Kilowatts

TYPICAL OPERATION

(Unless otherwise specified, values are for two tubes)

DC Plate Voltage	5,000 Volts
DC Grid Voltage	—150 Volts
Peak A-F Grid-to-Grid Voltage	1,260 Volts
Zero Signal DC Plate Current	0.4 Ampere
Maximum Signal DC Plate Current	2.25 Amperes
Effective Load Resistance, Plate-to-Plate	4,000 Ohms
Maximum Signal Driving Power, Approximate	175 Watts
Maximum Signal Power Output, Approximate	7.2 Kilowatts

*Averaged over any audio-frequency cycle of sine-wave form.

PLATE MODULATED RADIO-FREQUENCY POWER AMPLIFIER -- CLASS C TELEPHONY

(Carrier conditions per tube for use with a maximum modulation factor of 1.0)

MAXIMUM RATINGS, ABSOLUTE VALUES

DC Plate Voltage	5,000 Volts
DC Grid Voltage	—1,500 Volts
DC Plate Current	1.5 Amperes
DC Grid Current	0.2 Ampere
Plate Input	7.5 Kilowatts
Plate Dissipation	2 Kilowatts

TYPICAL OPERATION

DC Plate Voltage	5,000 Volts
DC Grid Voltage	—800 Volts
Peak R-F Grid Voltage	1,370 Volts
DC Plate Current	0.74 Ampere
DC Grid Current, Approximate	0.10 Ampere
Driving Power, Approximate	130 Watts
Power Output, Approximate	2.7 Kilowatts

RADIO-FREQUENCY POWER AMPLIFIER -- CLASS B

(Carrier conditions per tube for use with a maximum modulation factor of 1.0)

MAXIMUM RATINGS, ABSOLUTE VALUES

DC Plate Voltage	6,200 Volts
DC Plate Current	1.5 Amperes
Plate Input	4.5 Kilowatts
Plate Dissipation	3 Kilowatts

TYPICAL OPERATION

DC Plate Voltage	6,000 Volts
DC Grid Voltage	—160 Volts
Peak R-F Grid Voltage	300 Volts
DC Plate Current	0.56 Ampere
DC Grid Current, Approximate	0.0 Amperes
Driving Power, Approximate**	47 Watts
Power Output, Approximate	1 Kilowatt

**At crest of audio-frequency cycle with modulation factor of 1.0.

RADIO-FREQUENCY POWER AMPLIFIER AND OSCILLATOR -- CLASS C TELEGRAPHY

(Key-down conditions per tube without amplitude modulation) †

MAXIMUM RATINGS, ABSOLUTE VALUES

DC Plate Voltage	6,200 Volts
DC Grid Voltage	—1,500 Volts
DC Plate Current	2.0 Amperes
DC Grid Current	0.2 Ampere
Plate Input	12 Kilowatts
Plate Dissipation	3 Kilowatts

TYPICAL OPERATION

DC Plate Voltage	6,000 Volts
DC Grid Voltage	—800 Volts
Peak R-F Grid Voltage	1,510 Volts
DC Plate Current	1.4 Amperes
DC Grid Current, Approximate	0.16 Ampere
Driving Power, Approximate	225 Watts
Power Output, Approximate	6 Kilowatts

† Modulation, essentially negative, may be used if the positive peak of the envelope does not exceed 115 per cent of the carrier conditions.

MAXIMUM RATINGS vs. OPERATING FREQUENCY

Frequency	30	50 Megacycles
Percentage of Maximum Rated Plate Voltage and Plate Input Class C — Telegraphy	100	75 Per Cent

(Unless otherwise specified, values are for two tubes)

PLATE CHARACTERISTICS

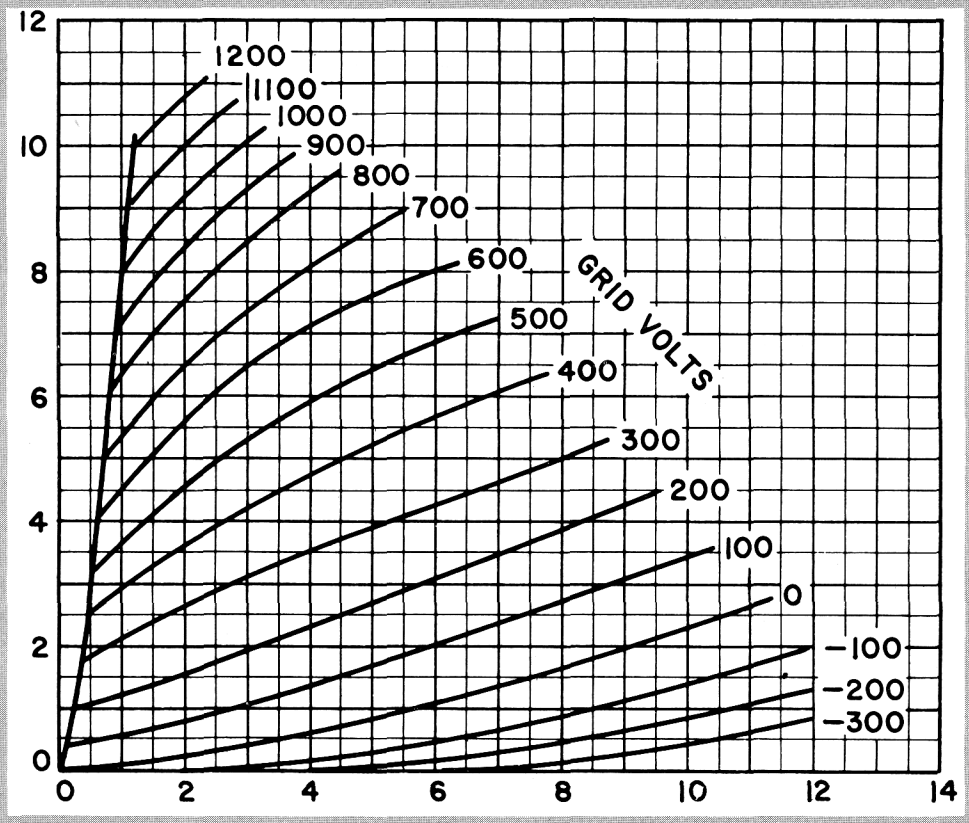

CONSTANT CURRENT CHARACTERISTICS

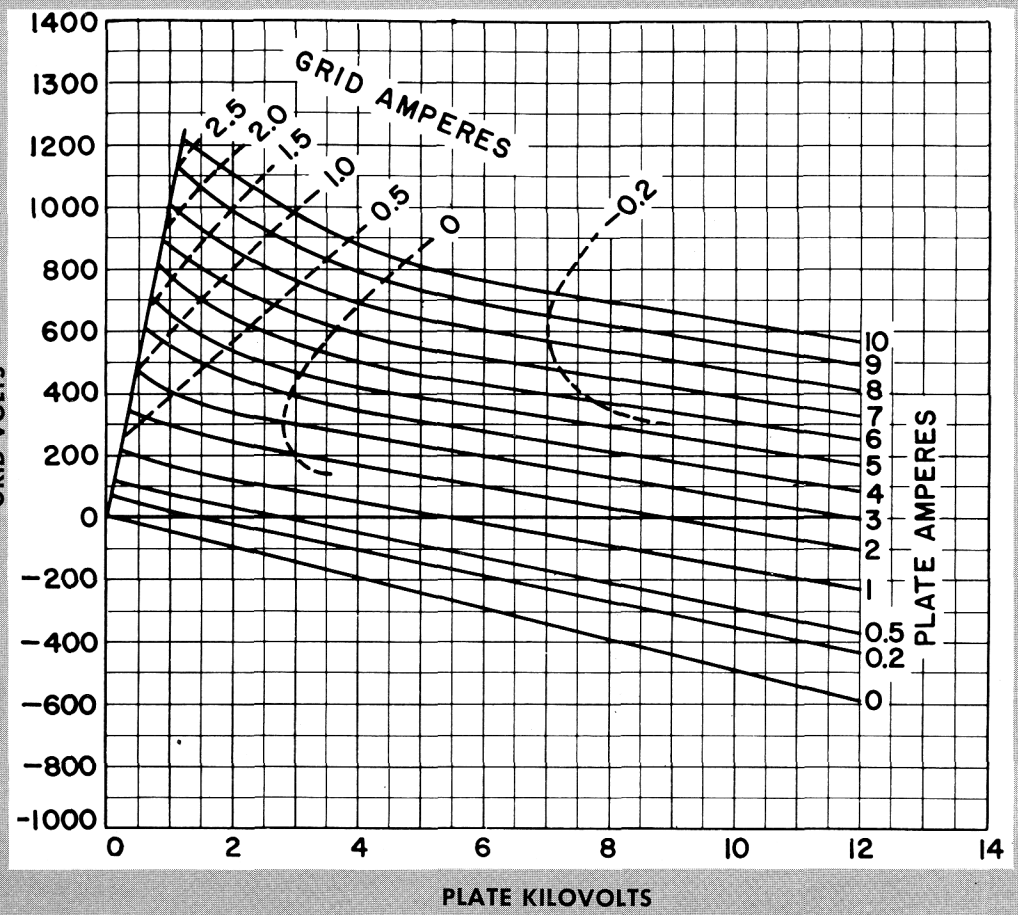

POWER TRIODE

TYPE

6367

PLATE DISSIPATION —3KW

CENTRAL ELECTRONIC

MANUFACTURERS

DENVILLE, NEW JERSEY

OUTLINE

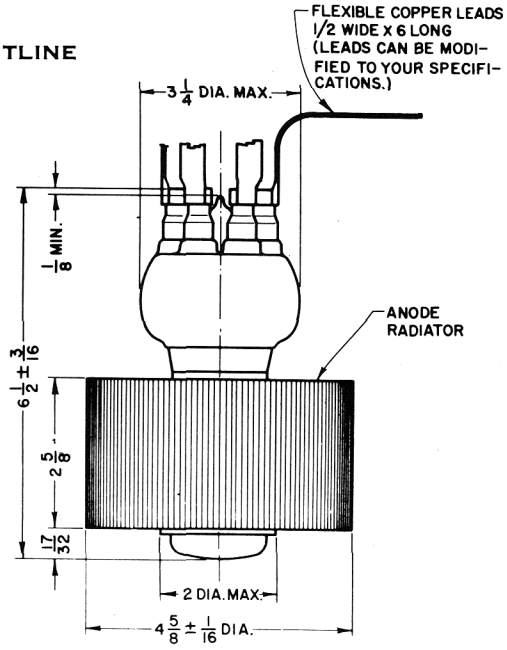

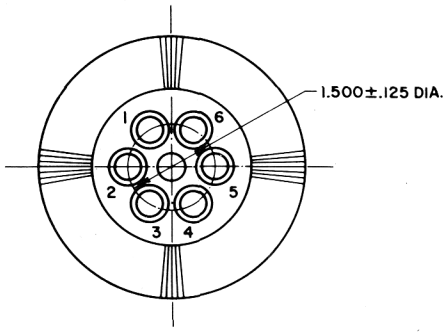

TERMINAL COLOR CODE

1=GRID -- BLACK
2=FIL. -- YELLOW
3=GRID -- BLACK
4=F.C.T. -- RED
5=GRID -- BLACK
6=FIL. -- YELLOW

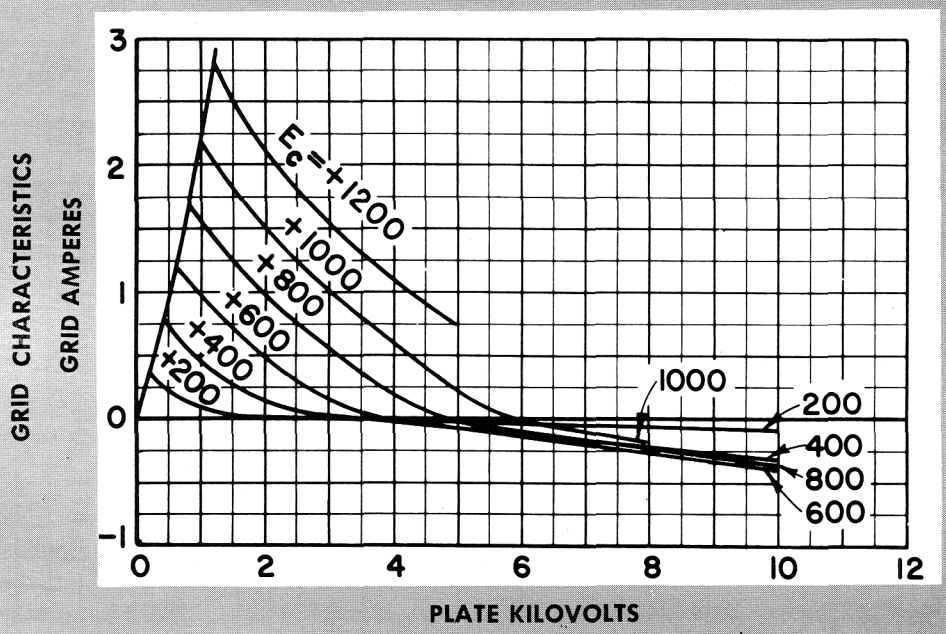

DIVISION OF NUCLEAR CORPORATION OF AMERICA

Printed in U. S. A.