VACUUM TUBE PRODUCTS

THERMOCOUPLE VACUUM GAUGE TUBE

Type VTP 6343

The VTP 6343 is a vacuum gauge tube of the thermocouple type used for measuring pressures in the range of .1 to 1000 microns. The VTP 6343 is a thermal conductivity gauge that provides an output E.M.F. determined by the operating current and the heat conductivity of the residual gas. A reliable pressure reading is obtained when the heater is supplied from a stabilized source.

The VTP 6343 is of all metal construction and is assembled by projection welding methods. The internal structure is ruggedized by design and is assembled by special fusing techniques, providing excellent sensitivity and very fast response.

Due to the speed of detecting changes in pressures, the VTP 6343 finds use in leak detecting as well as absolute pressure measuring. Vacuum systems may be probed with materials such as acetone to detect leaks due to the variation of thermal conductivity between acetone and air. When leaks are encountered the VTP 6343 will detect the vapor, and a decrease in output E.M.F. can be measured due to the acetone entering the system.

OPERATING CHARACTERISTICS

Heater Current Normal (Note 1)	Approx. 17.0 ma.
Heater Current Maximum (Note 3)	100 ma.
Heater Resistance (Cold) Nominal	$8\frac{1}{2}$ ohms
Heater Resistance (Hot) Nominal	18 ohms
Heater to Thermocouple Resistance (Note 2)	Less than 100 ohms
Thermocouple Output — with 55 ohm Load (Meter Internal Resistance)	
Hard Vacuum	10 Millivolts
Air	.1 Millivolts
Thermocouple Resistance (Cold)	$8\frac{1}{2}$ ohms
Speed of Response	Faster than .1 second
Basing	RETMA 8FR

Pin No.	1	3	5	7
Element	Heater	Neg. Thermocouple	Pos. Thermocouple	Heater

Note 1: While either A.C. or D.C. may be used, D.C. is recommended due to availability of less expensive and more accurate meters in this range. All gauge tubes are individually calibrated and marked with the heater current required to provide 10 millivolts output across 55 ohms when the gauge is under hard vacuum.

Note 2: While the heater and the thermocouple are in direct contact to provide maximum speed of response, use of this electrical circuit is not recommended unless the current is maintained below 50 ua.

Note 3: The heater may be operated at such a current and absolute pressure that the thermocouple output does not exceed 10 millivolts across a 55 ohm load. The internal elements will then remain below 200° C.

VACUUM TUBE PRODUCTS, 506 SOUTH CLEVELAND STREET, OCEANSIDE, CALIFORNIA

TELEPHONE: OCEANSIDE 6567

from RETMA release #1276, Feb. 5, 1954

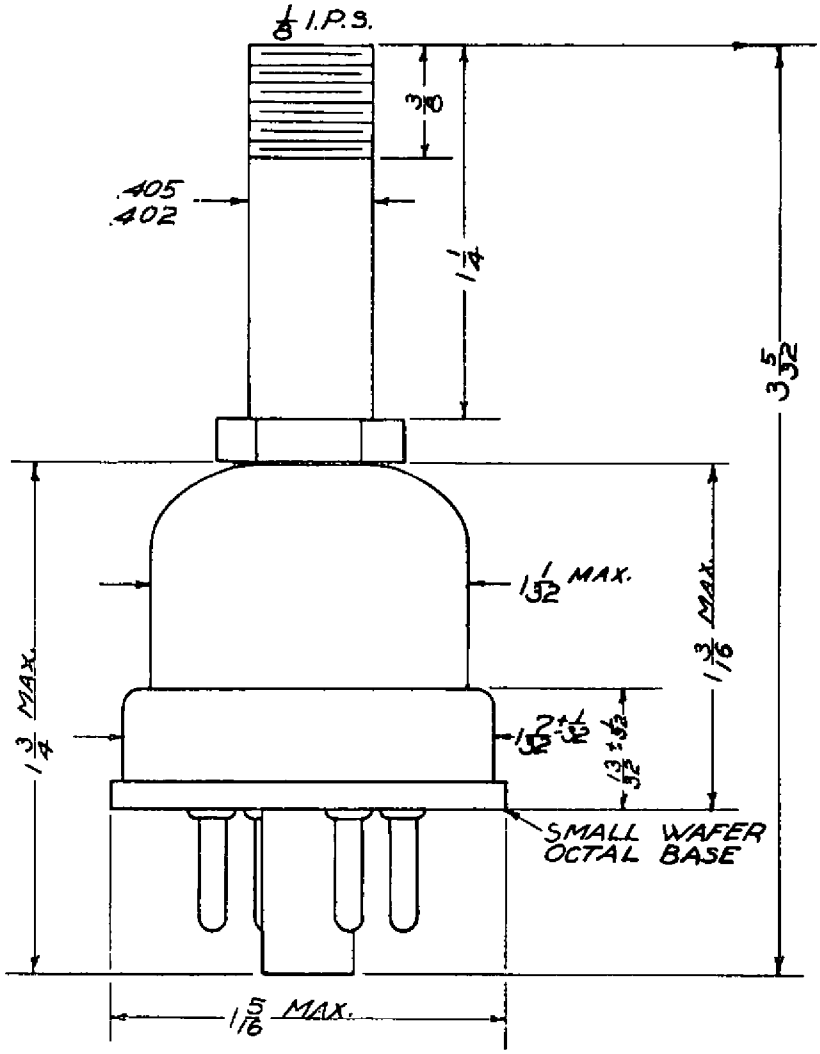

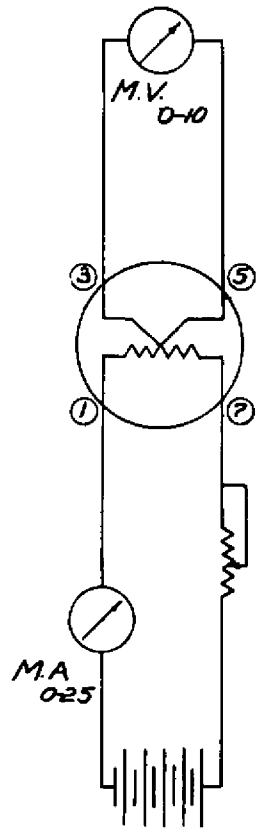

TYPICAL CIRCUIT

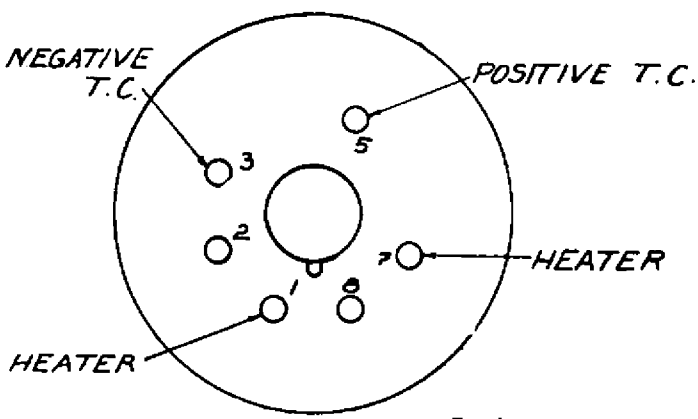

BASING 8FR
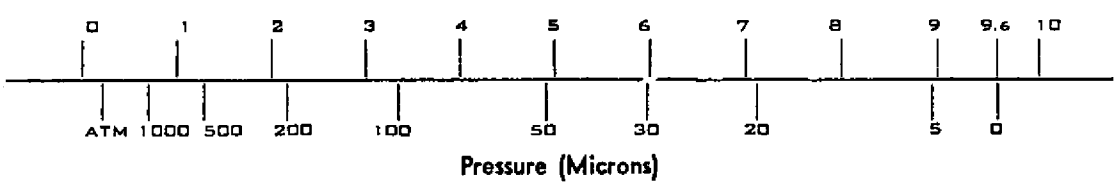
Typical Calibration Curve
Meter Millivolts