6293

BEAM POWER AMPLIFIER

For Pulse Modulator Service

TENTATIVE DATA

RCA-6293 is a small, sturdy, beam power amplifier tube intended for pulse modulator service in both fixed and mobile equipment. It can deliver a peak plate current of 3 amperes during a pulse length of 30 microseconds under conditions with duty factor of 0.003 and plate-supply voltage of 2000 volts; or a peak plate current of 1.4 amperes during a pulse length of 200 microseconds under conditions with duty factor of 0.02 and plate-supply voltage of 3500 volts.

Small in size for its power-output capability, the 6293 has a rugged button-stem construction with short internal leads, a T-12 bulb, triple base-pin connections for grid No.3 and cathode (both joined to internal shield inside the tube), and an octal base with short metal sleeve having its own base-pin terminal. The plate lead is brought out of the bulb to a cap opposite the base.

GENERAL DATA

Electrical:

Heater, for Unipotential Cathode:		
Voltage (AC or DC)	6.3 ± 10%	volts
Current	1.25	amp
Transconductance, for plate volts = 200, grid-No.2 volts = 200, and plate ma. = 100	7300	μmhos
Mu-Factor, Grid No.2 to Grid No.1 for plate volts = 200, grid-No.2 volts = 200, and plate ma. = 100	4.5	
Direct Interelectrode Capacitances:*		
Grid No.1 to Plate	0.22 max.	μμf
Input	13.5	μμf
Output	8.5	μμf

Mechanical:

Mounting Position	Any	
Overall Length	3-11/16" ± 1/8"	
Seated Length	3-1/8" ± 1/8"	
Maximum Diameter	1-23/32"	
Bulb	T-12	
Cap	Small (JETEC No.C1-1)	
Base	Large-Wafer Octal 8-Pin with Sleeve (JETEC No.B8-86)	
Bulb Temperature (At hottest point)	175 max.	°C

MODULATOR - Rectangular-Wave Modulation

Maximum and Minimum CCS● Ratings, *Absolute Values:*

For Duty Factor♦ Between 0.001 and 1.0 and Maximum Averaging Time of 10000 μsec in Any Interval

DC PLATE SUPPLY VOLTAGE (E_{bb})▲	See Rating Chart I (Fig.1)	
INSTANTANEOUS PLATE VOLTAGE	115% of E_{bb}	
DC GRID-No.2 SUPPLY VOLTAGE▲	500 max.	volts
DC GRID-No.1 SUPPLY VOLTAGE▲	300 max. (Minimum--See Rating Chart I (Fig.1)	volts
GRID-No.1 VOLTAGE:		
Instantaneous Negative Value	400 max.	volts
Peak Positive Value	100 max.	volts
PEAK PLATE CURRENT	See Rating Chart II (Fig.2)	
PEAK GRID-No.2 CURRENT	0.75 max.	amp
PEAK GRID-No.1 CURRENT	0.5 max.	amp
PLATE INPUT	80 max.	watts
GRID-No.2 INPUT	1.75 max.	watts
GRID-No.1 INPUT	0.5 max.	watt
PLATE DISSIPATION#	See Rating Chart I (Fig.1)	
PEAK HEATER-CATHODE VOLTAGE:		
Heater negative with respect to cathode	135 max.	volts
Heater positive with respect to cathode	135 max.	volts

Typical Operation with Rectangular-Wave Shapes in Test Circuit of Fig.3:

With Duty Factor♦ of 0.01

DC Plate Supply Voltage	3000	volts
DC Grid-No.2 Supply Voltage	300	volts
DC Grid-No.1 Supply Voltage	-175	volts
Peak Positive Grid-No.1 Voltage	65	volts
Plate Current:		
Peak	1.5	amp
DC	0.015	amp
DC Grid-No.2 Current	0.004	amp
DC Grid-No.1 Current	0.0025	amp
Load Resistance (R_L), 100 watts, non-inductive	1500 ± 5%	ohms

Maximum Circuit Values:

Grid-No.1-Circuit Resistance	30000 max.	ohms

CHARACTERISTICS RANGE VALUES FOR EQUIPMENT DESIGN

	Note	*Min.*	*Max.*	
Heater Current	1	1.175	1.325	amp
Grid-No.1-to-Plate Capacitance	2	-	0.22	μμf
Input Capacitance	2	11.1	15.9	μμf
Output Capacitance	2	6.4	10.6	μμf

Copyright, 1953
Radio Corporation of America
TMK ® Marca Registrada

CHARACTERISTICS RANGE VALUES (Cont'd):

	Note	Min.	Max.	
Plate Current.	3	46	94	ma
Grid-No.2 Current. . .	3	0	5.5	ma
Peak Plate Current . .	1,4	2.4	-	amp

Note 1: With 6.3 volts ac on heater.

Note 2: With no external shield. Base sleeve (pin No.8) is grounded.

Note 3: With 6.3 volts ac on heater, dc plate voltage of 300 volts, dc grid-No.2 voltage of 200 volts, and dc grid-No.1 voltage of -33 volts.

Note 4: With the tube in the test circuit of Fig.3 under the following conditions: rectangular-wave modulation applied to grid No.1; pulse duration of 1 microsecond approx.; pulse repetition rate of 3000 cps approx.; dc plate supply voltage of 2000 volts; dc grid-No.2 supply voltage of 500 volts; dc grid-No.1 supply voltage of -300 volts; peak positive grid-No.1 swing of 100 volts; and load resistance (R_L) of 375 ± 5% ohms, 50 watts, non-inductive.

* With no external shielding and base sleeve connected to ground.

● Continuous Commercial Service.

♦ *Duty Factor* for the 6293 is defined as the "on" time in microseconds divided by 10000 microseconds.

"On" Time is defined as the sum of the durations of all the individual pulses which occur during any 10000-microsecond interval.

"Pulse Duration" is defined as the time interval between the two points on the pulse at which the instantaneous value is 70% of the peak value. The peak value is defined as the maximum value of a smooth curve through the average of the fluctuations over the top portion of the pulse.

▲ For tube protection, it is essential that sufficient resistance be used in the plate supply circuit, the grid-No.2 supply circuit, and the grid-No.1 supply circuit so that the short-circuit current is limited to 0.5 ampere in each circuit.

\# Averaged over any interval not exceeding 10000 microseconds. Care should be used in determining the plate dissipation. A calculated value based on rectangular pulses can be considerably in error when the actual pulses have a finite rise and fall time. Plate dissipation should preferably be determined by measuring the bulb temperature under actual operating conditions; then, with the tube in the same socket and under the same ambient-temperature conditions, apply to the tube sufficient dc input to obtain the same bulb temperature. This value of dc input is a measure of the plate dissipation.

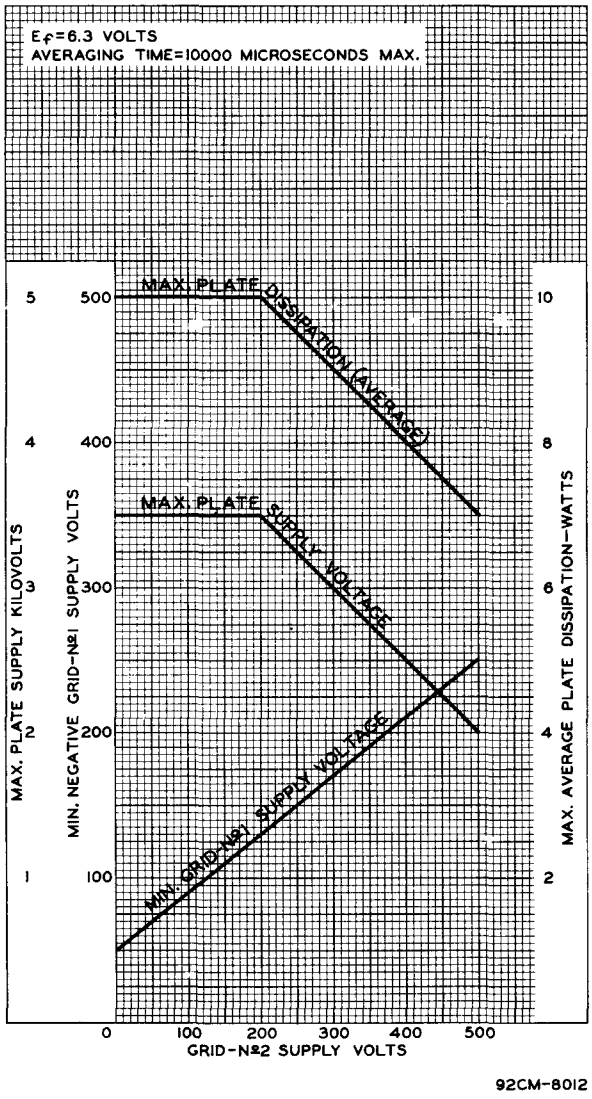

Fig.1 - Rating Chart I for Type 6293.

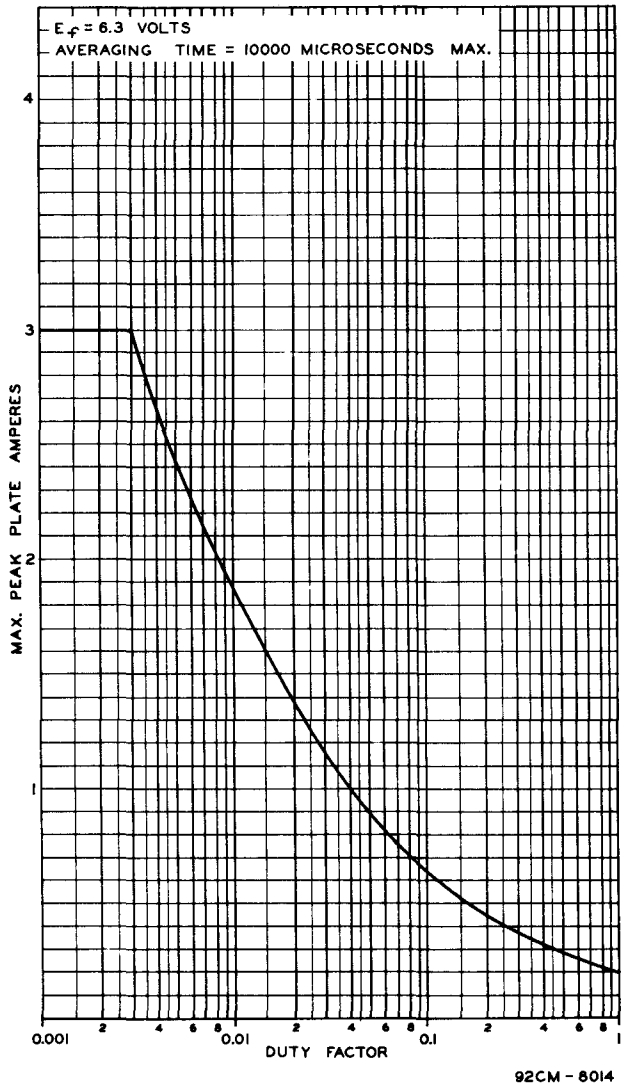

Fig.2 - Rating Chart II for Type 6293.

OPERATING CONSIDERATIONS

The *maximum ratings* in the tabulated data for the 6293 are limiting values above which the serviceability of the 6293 may be impaired from the viewpoint of life and satisfactory performance. Therefore, in order not to exceed these absolute ratings, the equipment designer has the responsibility of determining an average design value for each rating below the absolute value of that rating by an amount such that the absolute values will never be exceeded under any usual conditions of supply-voltage variation, load variation, or manufacturing variation in the equipment itself.

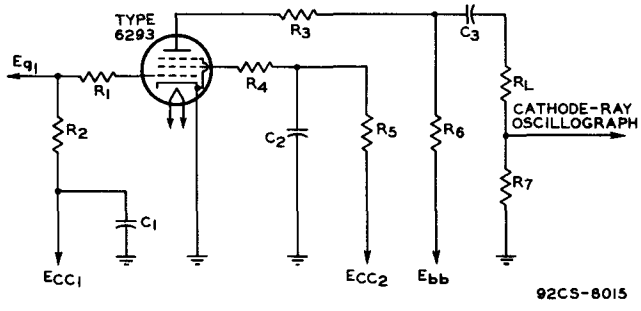

C_1: 0.1 μf, 600 v dc
C_2: 2 μf, 600 v dc
C_3: 0.25 μf, 5000 v dc
E_{cc1}: Grid-No.1 Supply Volt.
E_{cc2}: Grid-No.2 Supply Volt.
E_{bb}: Plate Supply Voltage
E_{g1}: Rectangular-Wave Signal Voltage
R_1: 20 ohms, 1 watt, non inductive
R_2: 30000 ohms, 1 watt
R_3: 10 ohms, 5 watts, non-inductive
R_4: 25 ohms, 1 watt, non-inductive
R_5: 1000 ohms, 1 watt
R_6: 10000 ohms, 50 watts
R_7: 30 ± 1% ohms, non-inductive
R_L: For values, see Typical Operation and Characteristics Range Values (Note 4)

Fig.3 - Test Circuit for Type 6293.

The *bulb* becomes hot during operation. To insure adequate cooling, therefore, it is essential that free circulation of air be provided around the 6293.

The *plate* shows no color when operated with maximum rated dissipation. Connection to the plate cap should be made with a flexible lead to prevent any strain on the seal at the cap.

For *tube protection*, it is essential that sufficient resistance be used in the plate supply circuit, the grid-No.2 supply circuit, and the grid-No.1 supply circuit so that the short-circuit current is limited to 0.5 ampere in each circuit.

The *test circuit*, shown in Fig.3, requires the use of damping resistors to suppress oscillations which may be caused by the rectangular-wave signal. These resistors should be non-inductive and they should be placed as close as possible to the socket terminals.

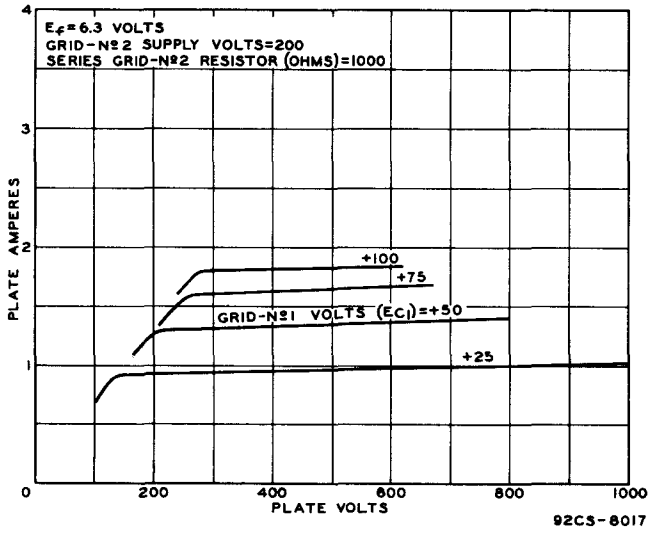

Fig.4 - Average Plate Characteristics of Type 6293.

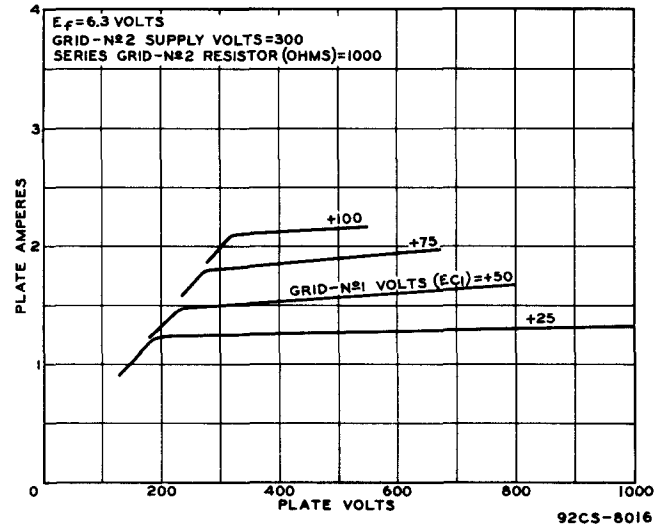

Fig.5 - Average Plate Characteristics of Type 6293.

Devices and arrangements shown or described herein may use patents of RCA or others. Information contained herein is furnished without responsibility by RCA for its use and without prejudice to RCA's patent rights.

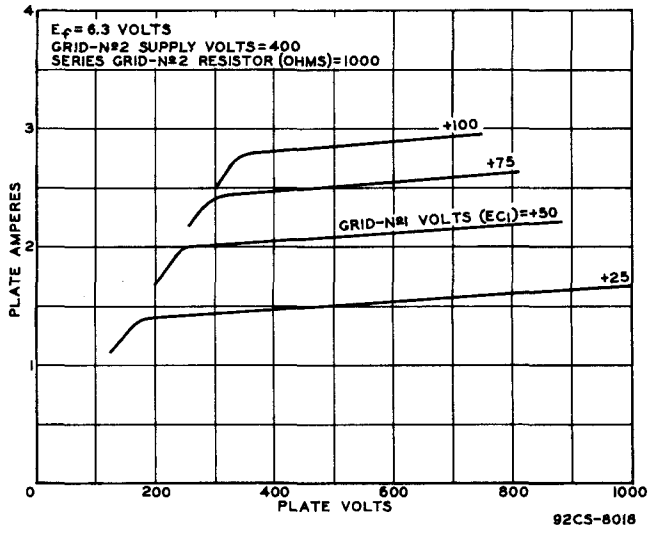

Fig. 6 - Average Plate Characteristics of Type 6293.

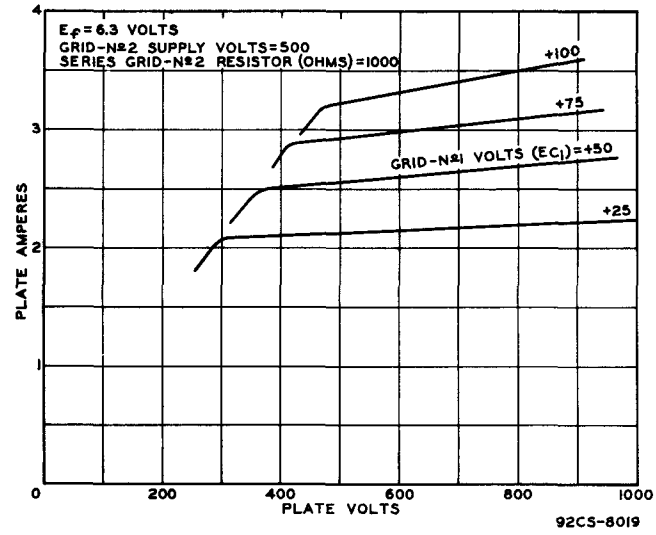

Fig. 7 - Average Plate Characteristics of Type 6293.

DIMENSIONAL OUTLINE

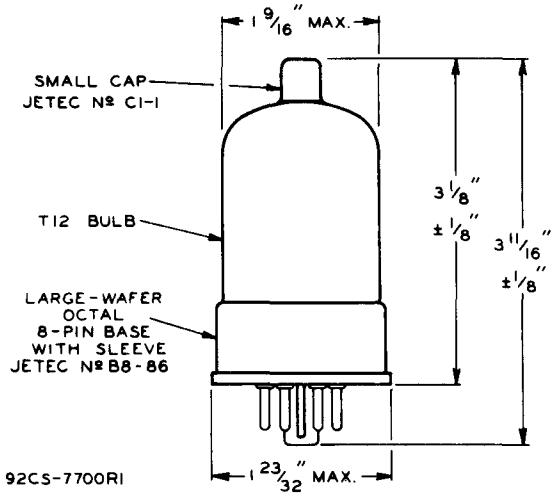

JETEC No. B8-86 BASE

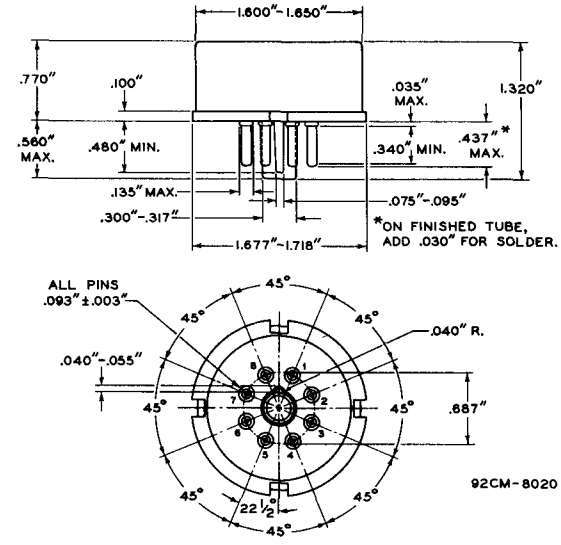

SOCKET CONNECTIONS

Bottom View

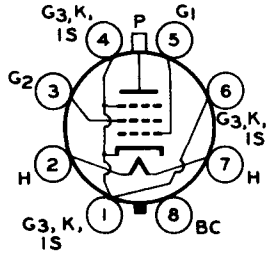

PIN 1: CATHODE, GRID No.3 INTERNAL SHIELD
PIN 2: HEATER
PIN 3: GRID No.2
PIN 4: SAME AS PIN 1
PIN 5: GRID No.1
PIN 6: SAME AS PIN 1
PIN 7: HEATER
PIN 8: BASE SLEEVE
CAP: PLATE

Base-pin positions are held to tolerances such that entire length of pins will enter flat-plate gauge (JETEC No.GB8-1) having thickness of 1/4" and eight 0.1030" ± 0.0005" holes so located on a 0.6870" ± 0.0005" diameter circle that the distance along the chord between any two adjacent hole centers is 0.2630" ± 0.0005".

Pin fit in gauge shall be such that gauge together with supplementary weight totaling 2 lbs. will not be lifted when pins are withdrawn.